01
19

endrichnews

www.endrich.com

Ein herzliches gutes Neues Jahr!

Liebe Leserinnen und Leser,

zuerst wünschen wir Ihnen ein herzliches gutes Neues Jahr. Mit viel Krach und Raketen haben wir das alte Jahr 2018 verabschiedet und das neue Jahr 2019 begrüßt. Die einen waren froh, dass sie es hinter sich hatten und die anderen schauten mit etwas bangen Blicken auf das kommende Jahr. Im Fernsehen und Zeitschriften überboten sich die Jahresvorausschauen, Prophezeiungen, Prognosen und trotzdem wissen wir alle nicht, was uns in diesem Jahr an frohen aber auch weniger frohen Neuigkeiten bewegen wird.

Eines ist uns klar geworden, der Wind in der Weltwirtschaft wird rauer. Deutschland hatte noch ein Wirtschaftswachstum von 1,5%, nicht schlecht, aber auch nicht Rekord verdächtig. Die Wirtschaftsforscher hatten ein besseres Ergebnis erwartet und unser Finanzminister Scholz hat einen Überschuss von über 10 Milliarden Euro erzielt, dies ist erfreulich.

Wir hatten einen langen Sommer mit großer Trockenheit und dadurch Verkehrsprobleme auf den Wasserwegen. Herr Trump will um alles in der Welt seine Mauer zu Mexiko aufbauen und hat uns mit manchen unverständlichen Reaktionen und Anordnungen überrascht, die den Welthandel erschweren werden. Auf der einen Seite will er sich aus der Weltwirtschaft zurück ziehen oder mit Ländergruppen neue Wirtschaftsabkommen abschließen, auf der anderen Seite bedroht der amerikanische Botschafter in Deutschland die Industrie mit Repressalien, falls die zweite Ostseegasleitung gebaut wird. Die Autoindustrie weiß auch noch nicht, ob es zu Einfuhrzöllen in die USA kommen wird und das Abstimmungsvotum des Britischen Parlaments mit der Niederlage von Frau May könnte uns als erstes Großereignis im Jahre 2019 Probleme bereiten. Die Ungewissheit über den Brexit ob er nun statt findet oder nicht, wird uns in diesen Tagen noch heftig beschäftigen.

Eines sollte uns klar sein, der Ton wird rauer und die Wachstumsraten werden künftig moderater ausfallen. Eine lineare Verlängerung der letzten Jahre sollte man besser nicht in Erwägung ziehen. Eine Rezession, dafür sprechen alle Anzeichen, sollte es in 2019 nicht geben, aber etwas Vorsicht ist sicherlich bei unseren wirtschaftlichen Handlungen angebracht. Ein wichtiges Ereignis wird sicherlich die Wahl zum Europaparlament sein und die Beteiligung und das Wahlergebnis spannend. Vom neuen Parlament wünschen wir uns mehr Aktivitäten im Außenbereich, aber weniger Regulierungen im EU-Bereich. Die Regulierungswut im Parlament muss gezügelt werden, damit der einzelne Bürger die Tätigkeit und den Sinn der Europäischen Wirtschaftsgemeinschaft akzeptieren und besser verstehen kann.

Meinen Wunsch an die Politiker wäre, mehr Praxisnähe zu praktizieren und sich auf die dringenden Probleme zu konzentrieren wie Digitalisierung, Altersarmut, Abschaffung des Solidaritätszuschlags, eine bessere Ausbildung unserer Kinder und verbesserte Vorbereitung auf den Wechsel ins Berufsleben wären notwendig. Das teilweise erschreckende Unwissen der Schulabgänger muss ein Ende finden. Arbeitslosigkeit lässt sich nur durch verbesserte Bildung vermeiden und an die Kultusminister der Länder geht der dringende Appell, in allen Bundesländern ein gleichmäßig hohes Bildungsniveau zu erzielen, denn das Nord-Süd-Gefälle zwischen den Schulen in Schleswig-Holstein und Bayern muss endlich überwunden werden.

Mit freundlichen Grüßen
W. Endrich

HAVE A LOOK

LoRa™ is a type of wireless telecommunication network designed to allow long range communications at a low bit rate among things (connected objects), such as sensors operated on a battery. AUREL S.p.A produce a full line of RF Transceiver solution on free-license frequencies 868 MHz Band, compliant with the European Normative, using a Lora RF Chip Set. Radiofrequency device based on LoRa™ modulation providing long range communication, high interference immunity, high sensitivity and low power consumption.

LoRa™ Transceiver Modules

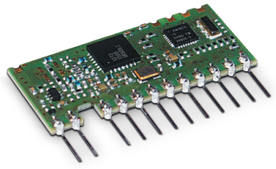

XTR-8LR100	**XTR-8LR10**
650201364G	650201415G
LORA™	LoRa™
3 V	3 V
869.4 ÷ 869.6 MHz	868 ÷ 870 MHz
-118 to -145 dBm	-115 to -137 dBm
100 MW MAX	25 mW
17 mA (RX) – 110 mA (TX)	17 mA (RX) – 30 mA (TX)
37 x 18 x 2.4 mm	33.5 x 15.4 x 2.4 mm

Half-Duplex transceivers for long distance, (up to 12 km) communication with LoRa™ modulation, able to ensure high immunity level against interferences and a reduced energy consumption. Working into European bandwidth 869.4 ÷ 869.65 MHz (100 mW) and 868.0 ÷ 868,6 MHz (25 mW) with link budget > 156 dBm. The transceiver modules XTR-8LR100 and XTR-8LR10 with UART interface and an implemented data packet addressing technique allows a point-multipoint communication and 248 byte of max. payload.

AUREL LORA™ MODULES – LINE UP

LoRa™ Module with Decoder & Encoder

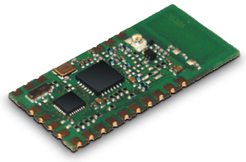

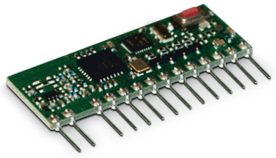

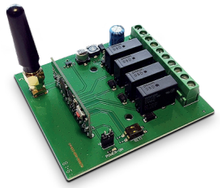

XTR-8LR-ENC	**XTR-8LR-DEC**	**ENC-8LR**	**DEC-8LR-4**
650201430G	650201431G	650201455G	650201454G
LoRa™	LoRa™	LoRa™	LoRa™
3 V	3 V	12 Vdc – 24 Vac	12 Vdc – 24 Vac
868.30 MHz	868.30 MHz	868.30 MHz	868.30 MHz
-122 dBm	-126 dBm	-126 dBm	-126 dBm
10 mW ERP	20 mW	10 mW	20 mW
1 µA (PWDN) – 16 mA (RX) – 45 mA (TX)	1 mA (RX IDLE) – 16 mA (RX) – 45 mA (TX)	16 µA (RX PWDN) – 14 mA (RX) – 36 mA (TX) @12 Vdc	3.4 mA (RX IDLE) – 11 mA (RX) – 26 mA (TX) @12 Vdc
35.5 x 18 x 2.3 mm	38.5 x 16 x 3.8 mm	72 x 68 x 14 mm	72 x 68 x 17.5 mm

XTR-8LR-ENC is a transmitter with encrypted communication that combined with the XTR-8LR-DEC is used to activate remote loads. Two-way communication allows getting acknowledgement of the status of the activated output.

XTR-8LR-DEC is a receiver with encrypted communication and can be combined with the XTR-8LR-ENC or with keyfob XTR-8LR- 4ZN. It's used to activate remote loads. The module makes available four open-collector outputs and two lines of setting the output functioning mode, the cyclical receiver mode also allows a consumption < 1 mA, allowing use in battery powered applications. The output state will be acknowledged to its transmitter.

Optional the decoder or encoder products are available as board. Aurel board, DEC-8LR-4 decoder, allows to control 4 different loads. ENC-8LR allows to store up to 48 encoder and control loads up to 5 A in mono and bistable mode. It is ideal for long distance control applications (8 km at sight) such as irrigation systems, alarms, etc. The power supply and control inputs connections of the radio channel can be available by a 5 mm pitch screw-style terminal block.

Contact for information: Mr. Gensler · Phone: +49(0)7452-6007-31 · e-mail: a.gensler@endrich.com

AUREL LORA™ MODULES – LINE UP

Products using LoRa™ Transceiver

XTR-8LR-USB	**XTR-8LR-REP**	**XTR-8LR-4ZN**	**XTR-BLR-SOS**
650201428G	650201474G	650201429G	650201475G
LoRa™	LoRa™	LoRa™	LoRa™
5 V by USB	220 Vac	3 V (CR2032 Lithium)	3 V (CR2450 Lithium)
868 ÷ 870 MHz	868.30 MHz	868.30 MHz	868.30 MHz
-118 to -145 dBm	-126 dBm	-122 dBm	-122 dBm
100 mW ERP	20 mW	10 mW ERP	5 mW
20 mA (RX) – 135 mA (TX)	1 W	2 µA (PWDN) – 16 mA (RX) – 45 mA (TX)	40 µA (Standby) – 16 mA (RX) – 45 mA (TX)
69 x 25 x 13 mm	105 x 105 x 55 mm	72 x 39 x 11 mm	72 x 39 x 11 mm

XTR-8LR-USB, a radio-modem with USB interface, used as receiver or concentrator for data from XTR-8LR10 and XTR-8LR100 modules. It can handle addressing data for point-to-multipoint or star networks, main radio parameters might be set up smoothly via command mode procedure, offering the user a variety of solutions and flexibility to the problems encountered in the field.

The repeater XTR-8LR-REP allows to enlarge the RF radio coverage between the Aurel XTR-8LR-4ZN keyfob (or XTR-8LR-ENC encoder) and the paired XTR-8LR-DEC decoder. 85 – 264 VAC power supply, IP55 enclosure and integrated antenna. The device embeds a supercapacitor for temporary power supply backup in case the primary power fails.

XTR-8LR-4ZN is a keyfob with encrypted communication that combined with the XTR-8LR-DEC is used to activate remote loads. Two-way communication allows getting acknowledgement of the status of the activated output.

SOS LONG DISTANCE REMOTE CONTROL
Dedicated for alarm detecting, alarm signaling, orientation, monitoring, Aurel released an LoraKeyfob, equipped with acceleration sensors, send automatic alarms in case of freefall, absence of mobility or parallel position to the ground. Acoustic signalization of alarm, manual call and cancel buttons.

Demo-boards for XTR-8LR100 and XTR-8LR10 are available. These boards allow easily to check functionality, power consumption, commands and performance of radio link. The difference between the two demo boards is on the mounted module, XTR-8LR100 that have modes of operation, normal, Rx cycle, Tx ADC value and XTR-8LR10 that is implemented the normal mode operation.

For more details about the operation mode refer to the user manual of the used module. The device is able to work with external power supply or powered by four AA batteries, for tests in stand alone.

Contact for information: Mr. Gensler · Phone: +49(0)7452-6007-31 · e-mail: a.gensler@endrich.com

NEW K-MD2 HIGH-END 3D RADAR TRANSCEIVER FROM RFBEAM

HAVE A LOOK

The K-MD2 is a high-end 3D radar transceiver with three receiving channels and a low phase noise PLL controlled transmitter. The target information from the three receive antennas is digitized and the high speed digital signal processing performs range and doppler FFT's with an update rate of 20 measurements per second. Using the serial interface, many operating parameters such as frequency, bandwidth and repetition rate can be adjusted. Results are available in target list format as well as in raw range-doppler matrices. Ethernet and a serial communication interfaces are included.

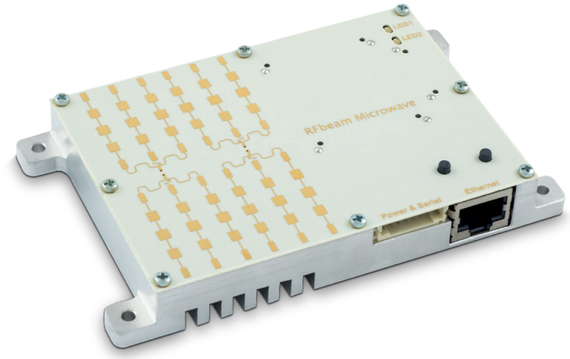

FEATURES

- 24 GHz FMCW radar with digital signal processing
- Angle of arrival in azimuth / elevation
- Serial target list output
- Detection distance: 100 m for persons / 200 m for cars
- Distance range: 0 to 250 m, 1 m resolution
- Speed range: ± 130 km / h, 1 km / h resolution
- Angle range: ± 9.1° (elevation) ± 16.4° (azimuth), 0.1° resolution
- Compact size: 120 × 72 × 15 mm

APPLICATIONS

- Traffic analysis and classification
- Intersection management
- Security systems
- Object speed measurement systems
- Measurement and research applications
- Industrial sensors

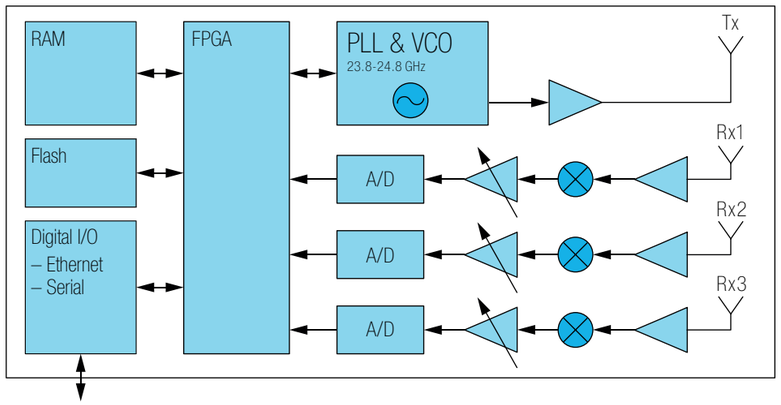

Blockdiagram

Contact for information: Mr. Deuschle · Tel.: +49(0)7452-6007-929 · e-mail: w.deuschle@endrich.com

15.6” INTERACTIVE MIRROR WITH TOUCH COMPUTER

HAVE A LOOK

The demand of multi-touch computers is growing continuously. The interactive mirror is the next development for multi-media applications in private and public bathrooms. In hotels, shopping malls or similar fields they can be used for special offers or ordering service personnel. Enrich your customer experience in the most advanced way.

The full stack-up of LCD-panel, touch sensor and mirror glass is optically bonded to exclude any internal dust or condensation. With its 15.6” Full-HD TFT display and 1.000 nits brightness the readability is extraordinary. Switched off, the display is hidden behind the one-sided mirror treated cover lens. 10-finger capacitive multi-touch enables interactive advertising, news ticker, movie and audio selection or controlling the smart home. The mirror is magic!

Inside, a powerful embedded V40 QuadCore CPU makes this mirror the best solution for any smart home or IoT application. The Android 6.0 operated system can easily be extended by any application from the PlayStore for unlimited functionality. This is Faytech’s most cost effective yet powerful QuadCore solution for multi-media and interactive bathroom entertainment control. With integrated WiFi and Bluetooth, you can connect your smartphone as well!

A surrounding LED bar is integrated in the frame to enlighten the bathroom or fitting room.

FEATURES

- Integrated embedded board with Android 6.0
- Full-HD TFT-display 1920 × 1080 dots
- Built-in Bluetooth 4.0 & WiFi
- Optically bonded mirrored screen
- Capacitive 10-finger-multi touch panel
- Comprehensive IP65 protection, including water- and dustproof
- Surrounding LED-bar

Contact for information: Mr. Rabe · Phone: +49(0)7452-6007-958 · e-mail: m.rabe@endrich.com

SITIME EMERALD PLATFORM, A GAME-CHANGING MEMS TIMING SOLUTION FOR 5G INFRASTRUCTURE

HAVE A LOOK

SiTime Corporation, a leading provider of MEMS timing, announced the Emerald Platform™, a revolutionary precision timing solution that solves critical timing challenges for 5G infrastructure equipment. With the Emerald Platform, operators can deploy 5G equipment in harsh environments and reliably offer mission-critical services.

By combining our revolutionary MEMS with programmable analog, innovative packaging and high-performance algorithms, Sitime have created a solution that is up to 20 times better than what is currently available,” said Rajesh Vashist, CEO of SiTime. SiTime’s Emerald Platform is the first MEMS oven controlled oscillator (OCXO) in the industry. OCXOs offer the pinnacle of performance in timing and are critical to the reliable operation of all communications networks. However, quartz-based OCXOs are extremely sensitive to environmental stressors such as vibration, temperature changes and shock, which can degrade network performance, reduce uptime, and impact mission-critical services such as advanced driver assistance systems (ADAS). SiTime’s Emerald OCXOs solve these problems.

Solving the usability challenges of Quartz OCXOs

Because of the sensitivity of legacy quartz OCXOs, customers have to take many precautions to ensure reliable operation. A key challenge is the board placement of the OCXO, which needs to be located far away from stressors such as heat and airflow-induced thermal shock. This results in increased routing complexity and potential signal integrity problems. Designers have also tried using specialized plastic OCXO covers for thermal isolation, which introduces additional manufacturing steps and production complexity. Emerald MEMS OCXOs eliminate all of these problems; they simplify design, reduce development time, accelerate revenue, while improving system performance.

Flexibility through programmability

Legacy quartz OCXOs are custom built, from the ground up. There are severe limitations on the availability of features, such as frequencies, output types, operating temperature, and in-system control. SiTime’s Emerald Platform MEMS OCXOs do not have these limitations. Using a programmable analog architecture, the Emerald OCXO offers any frequency between 1 and 220 MHz, ensuring that the customer can select the optimal frequency for his application. The device also offers two output types, LVCMOS and clipped sine-wave, for optimal board performance. In the near future, the Emerald OCXO will also offer extended temperature operation (-40 °C to +95 °C, -40 °C to +105 °C) and an I2C serial interface for in-system programmability.

Technology Highlights | Emerald Platform SiT5711 & SiT5712 OCXOs

All comparisons are with quartz-based Stratum 3E OCXOs

- 10 times better performance in the presence of airflow and thermal shock
  - ΔF/ΔT dynamic stability: ± 50 ppt / °C typical (ppt = parts per trillion)
  - Allan deviation (ADEV): 2e-11 under airflow
- Unmatched ease-of-use
  - No restrictions on PCB placement
  - No mechanical shielding is required for thermal isolation
  - On-chip regulators, no need for external LDOs or ferrite beads
  - Resistant to humidity
- Size: 9 x 7 mm, 75 % smaller. Adapter boards are available to match common OCXO footprints
- Height: 6.5 mm, 40 % thinner, eliminates obstruction in a chassis-based system
- 20 times better vibration resistance, ideal for outdoor pole mounted equipment
- Resistant to microphonic and/or board bending effects, ideal for large telecom PCBs
- Supports -40 °C to +85 °C temperature range today, -40 °C to +95 °C and -40 °C to +105 °C support available in the near future
- The only programmable OCXO platform, supports any frequency up to 220 MHz and LVCMOS / clipped sine-wave outputs
- Semiconductor-level quality and reliability, batch to batch consistency
- No activity dips

Contact for information: Mr. Gensler · Phone: +49(0)7452-6007-31 · e-mail: a.gensler@endrich.com

SiTime

SITIME EMERALD PLATFORM, A GAME-CHANGING MEMS TIMING SOLUTION FOR 5G INFRASTRUCTURE

PART NO.	OUTPUT FREQUENCY	FREQUENCY STABILITY	SUPPLY VOLT.	SUPPLY CURRENT (TYPICAL)	PACKAGES	OUTPUT LOGIC	FEATURES
OCXOs*							
SiT5711	1 MHz to 60 MHz	±0.005 ppm, ±0.008 ppm	3.3 V	180 mA (at 50 °C in steady state)	9.0 x 7.0 mm 14.0 x 9.0 mm 20.0 x 13.0 mm 25.0 x 22.0 mm	LVCMOS, Clipped Sinewave	±1.5 ppb / °C ΔF/ΔT
SiT5712	60 MHz to 220 MHz						
TCXO/VCTCXO/DCTCXOs**							
SiT5358/59	1 MHz to 220 MHz	±0.05 ppm	2.5 V, 2.8 V, 3.0 V, 3.3 V	40 mA to 45 mA	5.0 x 3.2 mm	LVCMOS, Clipped Sinewave	I2C programmable, 1 ppb / °C slope, 0 °C to +70 °C
SiT5356/57		±0.1 ppm, ±0.2 ppm, ±0.25 ppm					
SiT5155	13 Standard Freq.	±0.5 ppm, ±1 ppm, ±2.5 ppm					I2C programmable, ±1 ppb / °C slope, -40 °C to +105 °C
SiT5156/57	1 MHz to 625 MHz						
SiT5021/22	1 MHz to 625 MHz	±5 ppm	2.5 V, 3.3 V, 2.25 V to 3.63 V	55 mA to 69 mA	3.2 x 2.5 mm, 5.0 x 3.2 mm, 7.0 x 5.0 mm	LVPECL, LVDS	0.6 ps rms phase jitter
SiT5000/01	1 MHz to 80 MHz		1.8 V, 2.5 V, 2.8 V, 3.0 V, 3.3 V	29 to 31 mA	2.5 x 2.0 mm, 3.2 x 2.5 mm, 5.0 x 3.2 mm, 7.0 x 5.0 mm	LVCMOS	0.5 ps rms phase jitter

* Airflow and thermal shock resistant, stratum 3E compliant – best holdover in dynamic conditions, smallest OCXO

** ±6.25 to ±3200 ppm pull range, 5 ppt resolution frequency control, best reliability, 0.1 ppb/g (vibration sensitivity)

AVAILABILITY: Samples of the Emerald MEMS OCXO SiT5711/12 are available now for qualified customers. Production quantities will be available in Q2 2019.

Contact for information: Mr. Gensler · Phone: +49(0)7452-6007-31 · e-mail: a.gensler@endrich.com

HEADQUARTERS

ENDRICH Bauelemente Vertriebs GmbH
P.O.Box 1251 · 72192 Nagold, Germany
T +49 (0) 7452 6007-0
F +49 (0) 7452 6007-70
endrich@endrich.com
www.endrich.com

SALES OFFICES IN EUROPE

France
Paris:
T +33/186653215
france@endrich.com

Lyon:
T +33/186653215
france2@endrich.com

Spain
Barcelona:
T +34/93 217 31 44
spain@endrich.com

Bulgaria
Sofia:
bulgaria@endrich.com

Austria & Slovenia
Brunn am Gebirge:
T +43/1 665 25 25
austria@endrich.com

Romania
Timisoara:
romania@endrich.com

Hungary
Budapest:
T +361/2 97 41 91
hungary@endrich.com

Switzerland – Novitronic
Zurich:
T +41/44 306 91 91
info@novitronic.ch

Certified acc. to ISO 9001:2015 / 14001:2015