Outline Dimension

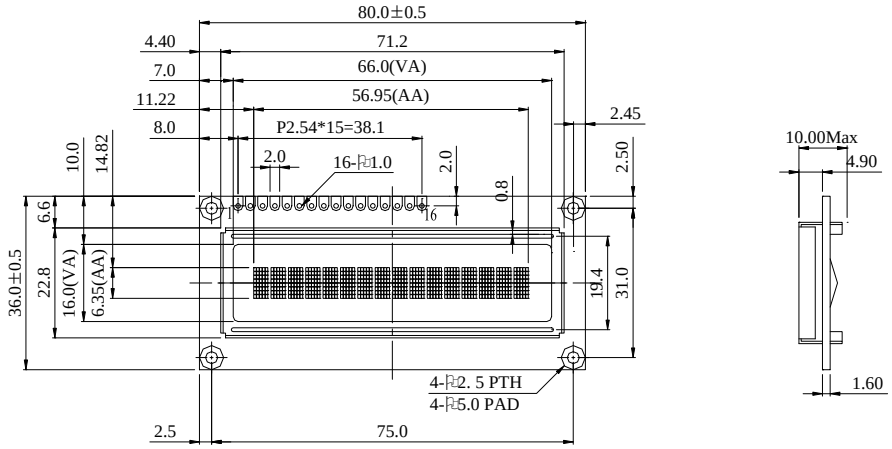

PIN NO.	SYMBOL
1	Vss
2	Vdd
3	NC
4	RS
5	R/$\overline{W}$
6	E
7	DB0
8	DB1
9	DB2
10	DB3
11	DB4
12	DB5
13	DB6
14	DB7
15	NC
16	NC

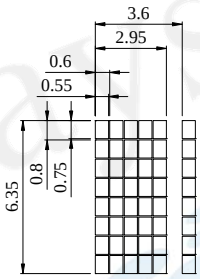

DOT SIZE
SCALE 5/1

The non-specified tolerance of dimension is ±0.3 mm .