Advanced Circuit Protection Components

Military & Aerospace Applications

Advanced circuit protection devices for overvoltage and overcurrent transient events.

Only One Name Means ProTek'Tion™

PROTEK DEVICES

According to *National Geographic**, there are about 100 lightning bolt strikes on the Earth's surface every single second. Each bolt can contain up to one billion volts of electricity. The *National Severe Storms Laboratory (NSSL)** estimates at least 30 million points on the ground are struck on average each year, just in the USA. In the air, perhaps where the military and commercial air fleets are concerned, it is estimated that each airliner in the USA will be hit by lightning once per year. Furthermore, static electricity, which humans very commonly generate, can have some 35,000 volts of electricity. Either a billion volts or 35,000 volts are far more than enough to destroy important electronics within mission-critical systems. In military and aerospace markets, protecting costly equipment – from vehicles to aircraft and beyond – from such electrical events is a requirement.

Any computer chip exposed to such electrical transients, without proper electrostatic discharge (ESD) protection, will experience catastrophic destruction. An ESD transient can bore through the layers of a device, severing any trace of an integrated circuit in part or in whole. This can cause intermittent or no operation capabilities for the related system.

Because of these concerns, there are extensive military and aerospace standards defined to protect electronic circuits. MIL-STD-704 defines protection for aircraft, MIL-STD-1275 for vehicles, and MIL-STD-1399 for shipboards. In addition, RTCA/DO-160 defines added circuit protection for aircrafts and MIL-STD-331 adds helicopters. These standards define how to ensure proper circuit protection against lightning, inductive switching, ESD, electromagnetic interference/radio frequency interference (EMI/RFI), and against nuclear electro-magnetic pulses.

COMMON MILITARY & AEROSPACE CIRCUIT PROTECTION STANDARDS

STANDARD	WAVEFORM	VOLTAGE	CURRENT	COMMENTS
MIL-STD-704 (Aircraft)	50ms 50ms 5/20µs	50V 180V 200 - 600V	500A 1800A 12A	Switching Surge Switching Surge Induced Switching
MIL-STD-1275 (Vehicles)	50ms 50ms 0.1ms	100V 40V 250V	200A 2000A	Surge, 500mΩ Surge, 20mΩ Spike
MIL-STD-1399 (Shipboard)	1.2/50µs 1.2/50µs	2500V 1000V	500A 200A	Spike Spike
RTCA/DO-160 (Aircraft)	1MHz 6.4/70µs 50/500µs	1500V 750V 750V	60A 150A 750A	Level 4 Level 4 Level 4
MIL-STD-331 (Helicopter)	15/400ns 15ns	25kV 300kV	50A 300kA	Personal Helicopter

Typical Applications
Within military and aerospace electronics systems, there are a wide variety of applications that these standards were designed for:

- Fire Control Systems
- Soldier Command Systems
- Modular Laser Fire Control Systems
- Multi-Sensor Platforms
- Connectors
- Power Supplies and Control Systems (28V power supply and battery)
- High-Current MOSFETs
- Avionics Communications Systems
- Navigation Systems
- Static Inverters
- Other Control Systems
- IGBTs
- Avionics Instrumentation

ProTek Devices has an extensive family of circuit protection components widely used in any of these military and aerospace applications. The components deliver primary and/or secondary side protection against ESD, electrical fast transients (EFT), surge, and lightning. They can also provide common-mode, differential-mode, and low capacitance protection. ProTek Devices' components are well-known for meeting the strictest of standards requirements, from military standards and IEC, to RoHS and REACH, and more. The components are also designed to be provided in small packages suitable for even the smallest footprint military and aerospace applications.

*Sources:
http://environment.nationalgeographic.com/environment/natural-disasters/lightning-profile/
https://www.nssl.noaa.gov/education/svrwx101/lightning/faq/
http://usatoday30.usatoday.com/weather/resources/askjack/2003-05-06-lightning-airplanes_x.htm

SELECTION GUIDE	
INTERFACE/APPLICATION	**DEVICE**
AC Power	60KS/90KS200C, PHP120/240, 5.0SMDJ Series, SMAJ Series, SMBJ Series, SMCJ Series, SMDJ Series
AC Power - Shipboard	PHP/PIP Series, 90KS200C, GPZ Series, 30KPA Series, SM30KPAxx/CAN Series
AC Power - Aircraft	PHP/PIP Series, 90KS200C, 704 Series, 30KPA Series, SM30KPAxx/CAN Series
AC/DC Power	2700SM78CAN, SM15KPAxx/CAN Series, 15KPA Series, PSD05HP, SM3KW24A, SM5KW Series
Antenna	GBLCxx Series
DC-DC Converter	SM15KPAxxAN Series, 15KPA Series
EMP Protection	PUSB6B, PSR05
Fast Ethernet	SRV05-4
Gigabit Ethernet	SRV25-4, SRV05-4, PLC03-3.3
High Frequency Data Lines	SM8LC05C, PLCDA05C, PSLC05C, GBLC05C
Key Pad	PRSB6.8C
Low Frequency Data Lines	SMDA05C, CP05C, PSOT05C, PSD05C, 5.0SMDJ Series, SMAJ Series, SMBJ Series, SMCJ Series, SMDJ Series
RS-485	PSM712, 485ELC

SELECTION GUIDE BY POWER LINE				
PART NUMBER	**POWER (Watts)**	**PULSE WAVEFORM**	**PACKAGE**	**APPLICATION**
15KPA Series	15000	10/1000µs	Axial-Lead	AC/DC Line
2700SM78CA	2,500K	8/20µs	Surface Mount	Network Power
30KPA Series	30000	10/1000µs	Axial-Lead	AC/DC Line
5.0SMDJxxA/CA Series	5000	10/1000µs	DO-214AB	AC/DC Line
PSDxx/C Series	400 (Uni), 500(Bi)	8/20µs	SOD-323	Low Voltage DC Line
PSDxxHP Series	1000	8/20µs	SOD-323	Low Voltage DC Line
PSOTxx/C Series	500	8/20µs	SOT-23	Low Voltage DC Line
SM15KPAxxA/CAN Series*	15000	10/1000µs	Surface Mount	AC/DC Line
SM30KPAxxA/CAN Series*	30000	10/1000µs	Surface Mount	AC/DC Line
SM3KW24A*	3000	10/1000µs	DFN-2-3KW	AC/DC Line
SM5KW Series*	5000	10/1000µs	DFN-2-5KW	AC/DC Line
SMAJxxA/CA Series	400	10/1000µs	DO-214AC	AC/DC Line
SMBJxxA/CA Series	600	10/1000µs	DO-214AA	AC/DC Line
SMCJxxA/CA Series	1500	10/1000µs	DO-214AB	AC/DC Line
SMDJxxA/CA Series	3000	10/1000µs	DO-214AB	AC/DC Line
*Prefix 'SM' indicates a surface mount device.				

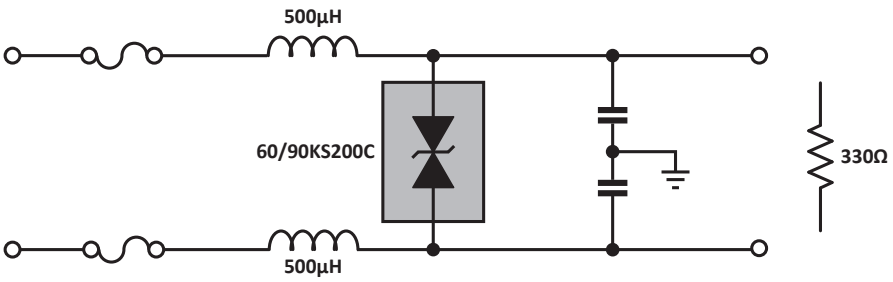

Figure 1. Primary Side AC Power Protection using 60/90KS200C

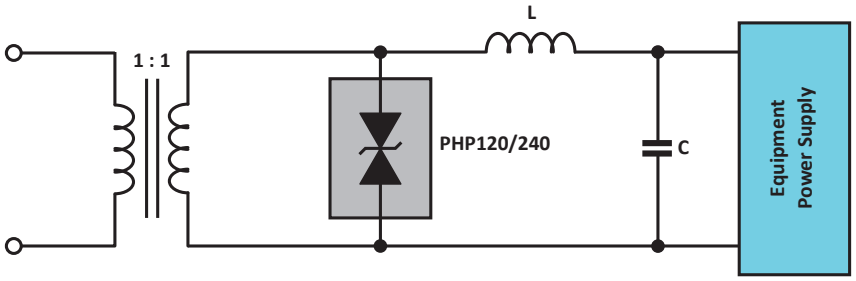

Figure 2. Secondary Side AC Power Protection using PHP120/440

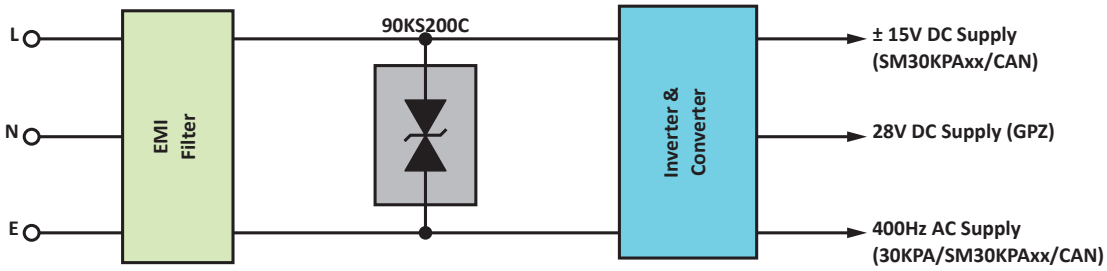

Figure 3. Shipboard AC Power Supply Protection Using 90KS200, GPZ Series, 30KPA Series and SM30KPAxx/CAN Series

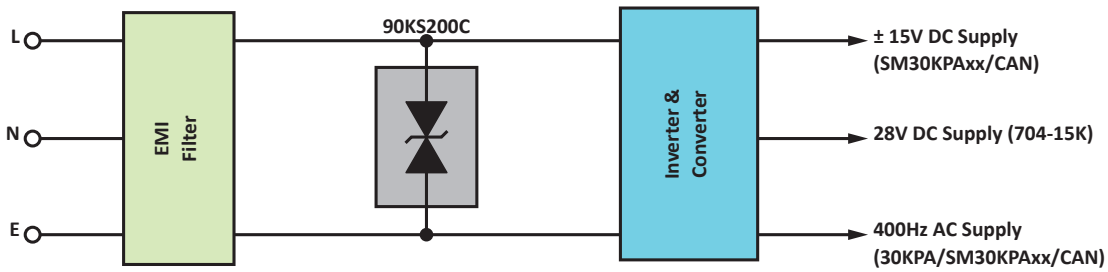

Figure 4. Aircraft AC Power Supply Protection Using 90KS200, 704 Series, 30KPA Series and SM30KPAxx/CAN Series

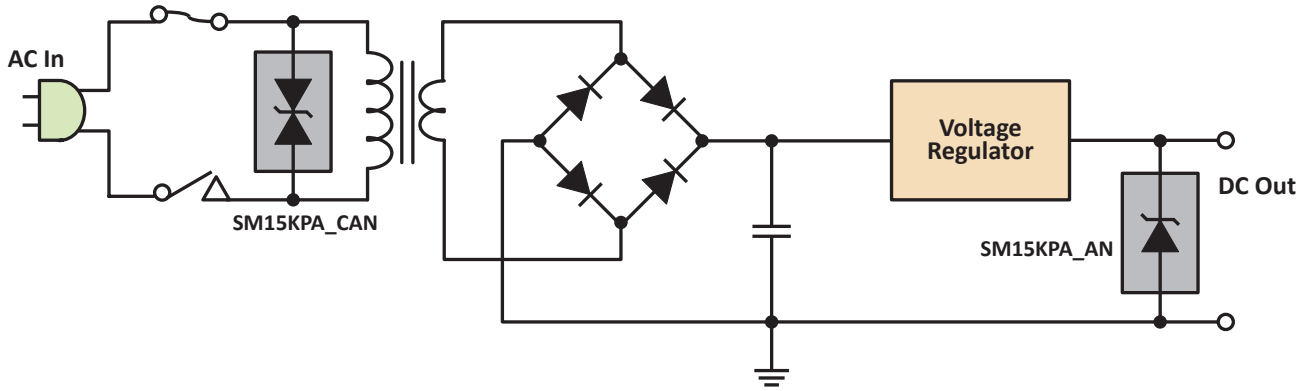

Figure 5. AC/DC Power Supply Protection Using: SM15KPAxx/CAN & 15KPAxxCA Series (Primary Side) and SM15KPAxxAN & 15KPA Series, SM3KW, SM5KW and PSD05HP (Secondary)

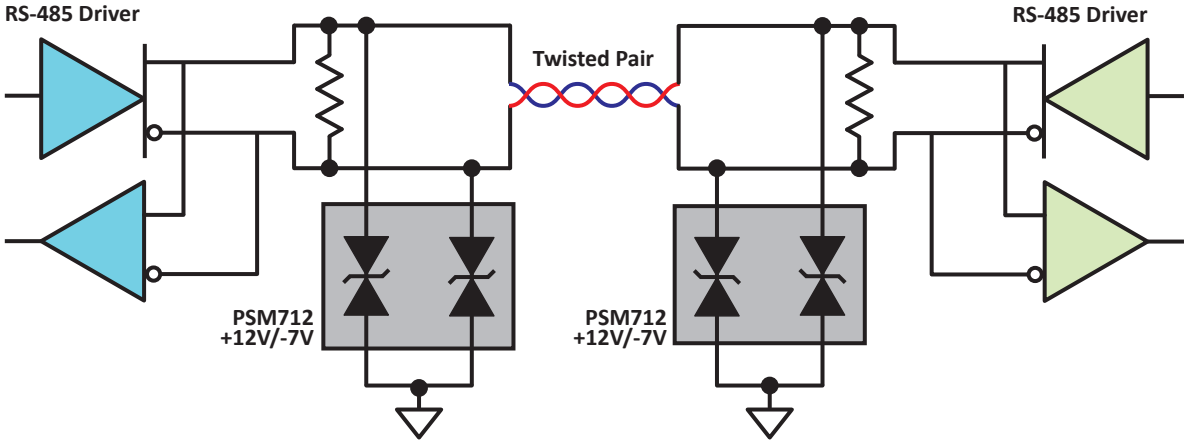

Figure 6. RS-485 Driver Application Using Two PSM712 Devices

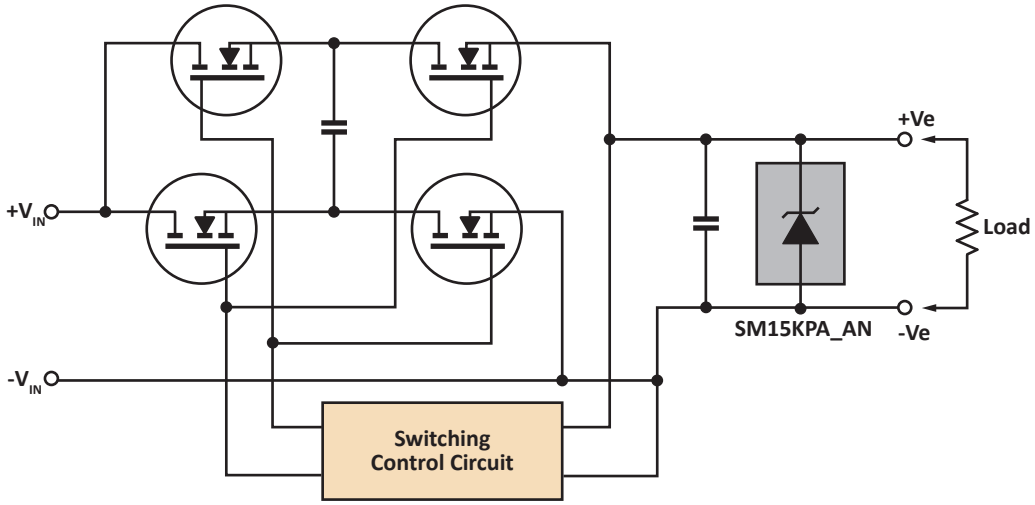

Figure 7. DC-DC Converter Protection (Charge Pump) Using SM15KPAxxAN Series

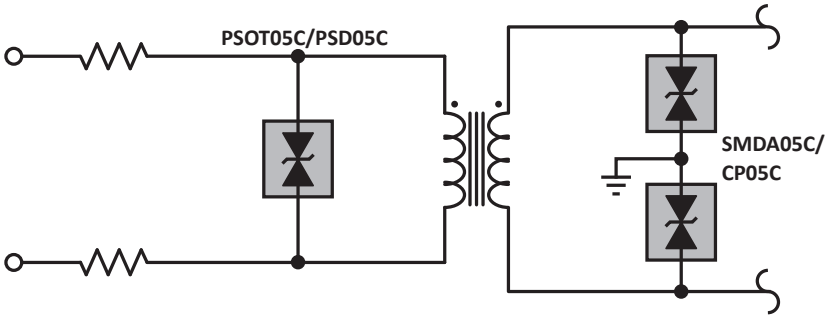

Figure 8. Low Frequency Data Line Protection Using PSOT05C, PSD05C, SMDA05C and CP05C

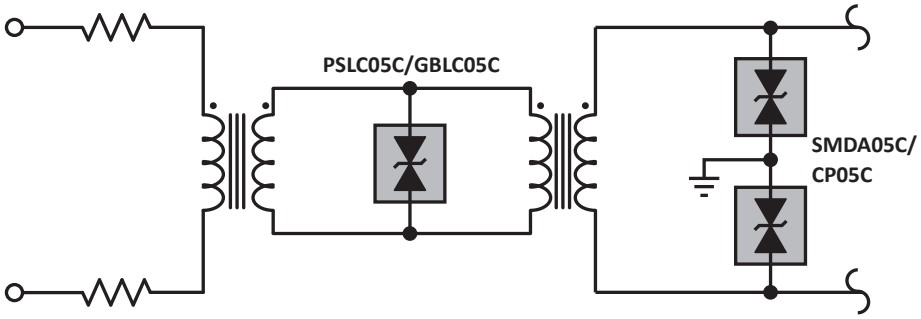

Figure 9. High Frequency Data Line Protection Using PSLC05C, GBLC05C, SM8LC05C, PLCDA05

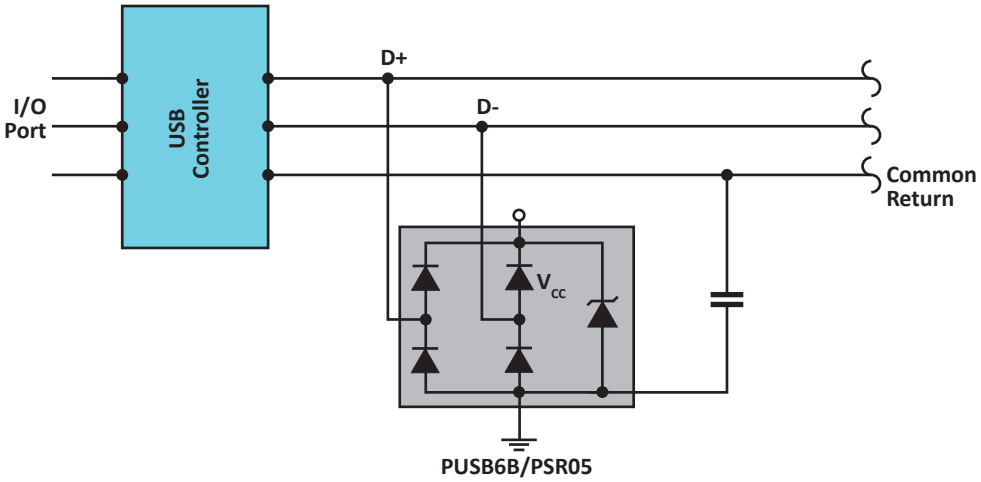

Figure 10. EMP Protection Using PUSB6.8 or PSR05

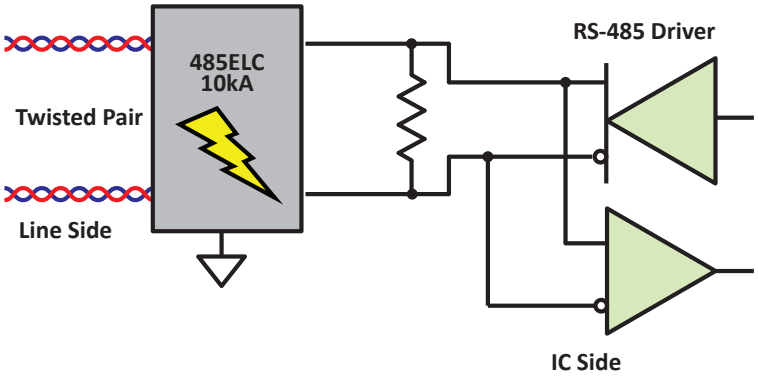

Figure 11. RS-485 Port Protection Using 485ELC

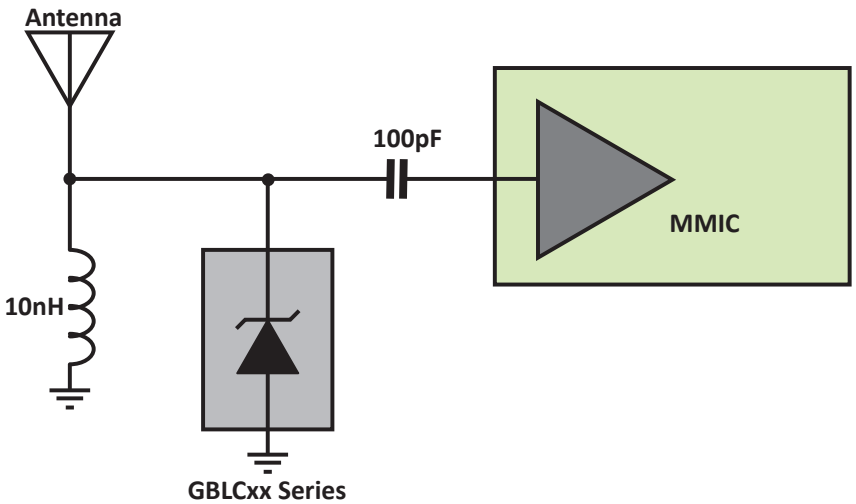

Figure 12. Antenna Protection Solution Using GBLCxx Series

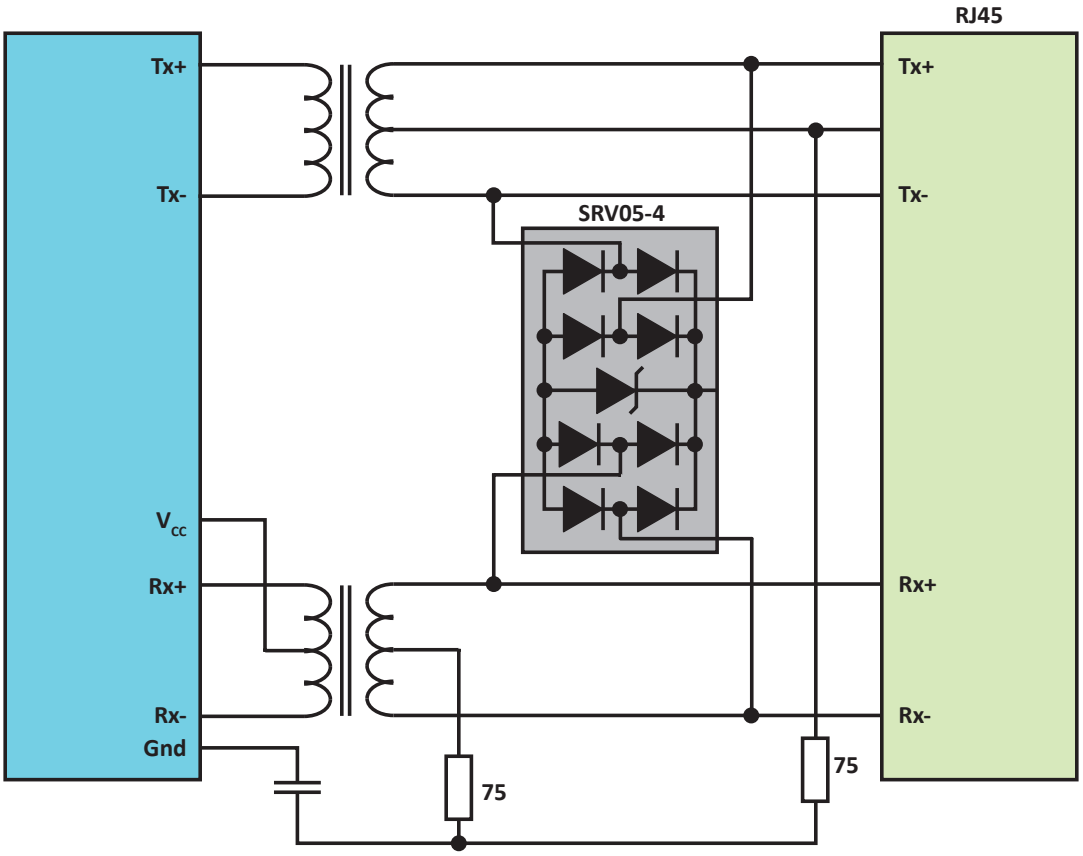

Figure 13. Fast Ethernet Protection Using SRV05-4

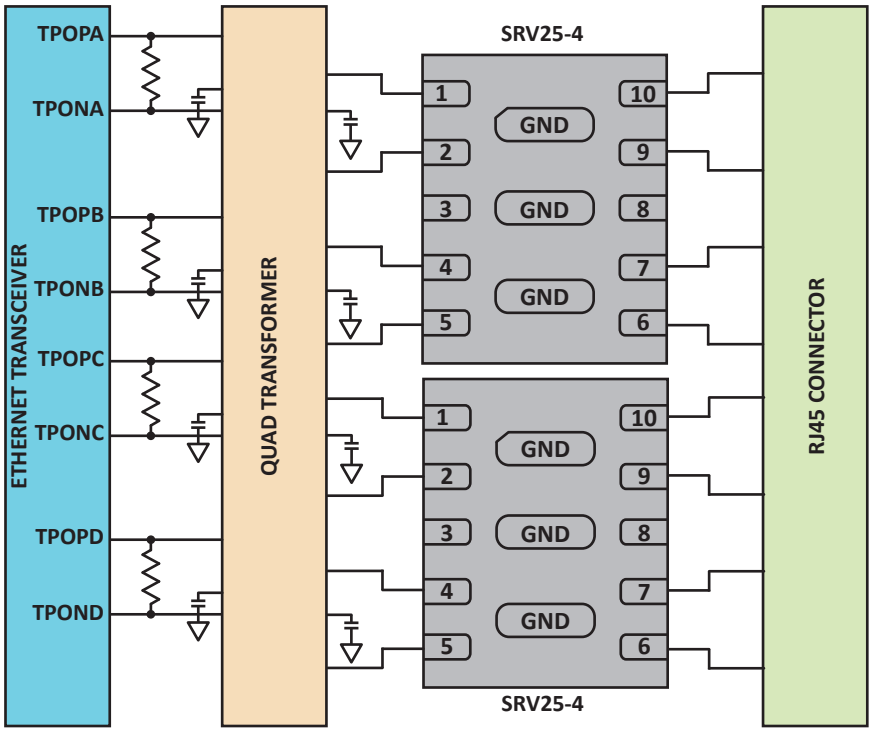

Figure 14. Single GbE Port for Surge CP Using SRV25-4

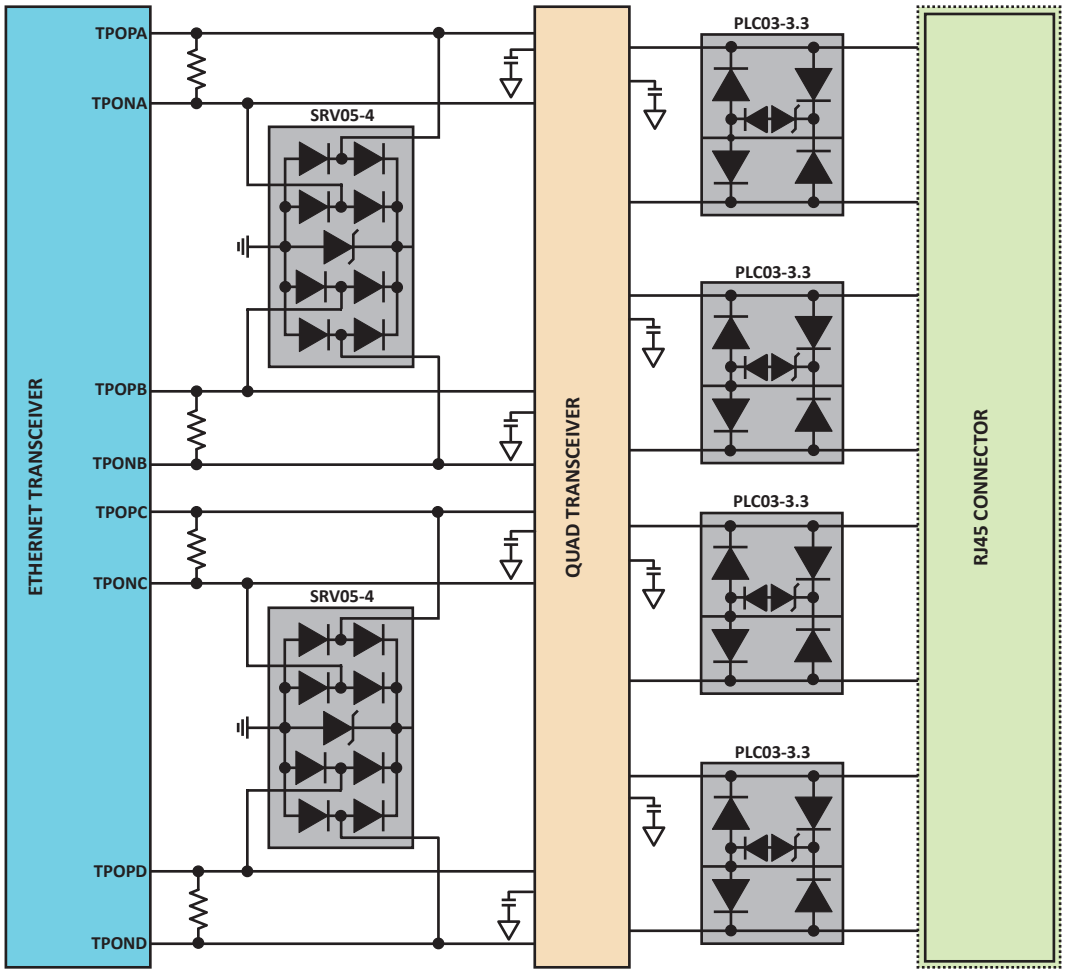

Figure 15. Single GbE Port Intra Building Using PLC03-3.3 and SRV05-4

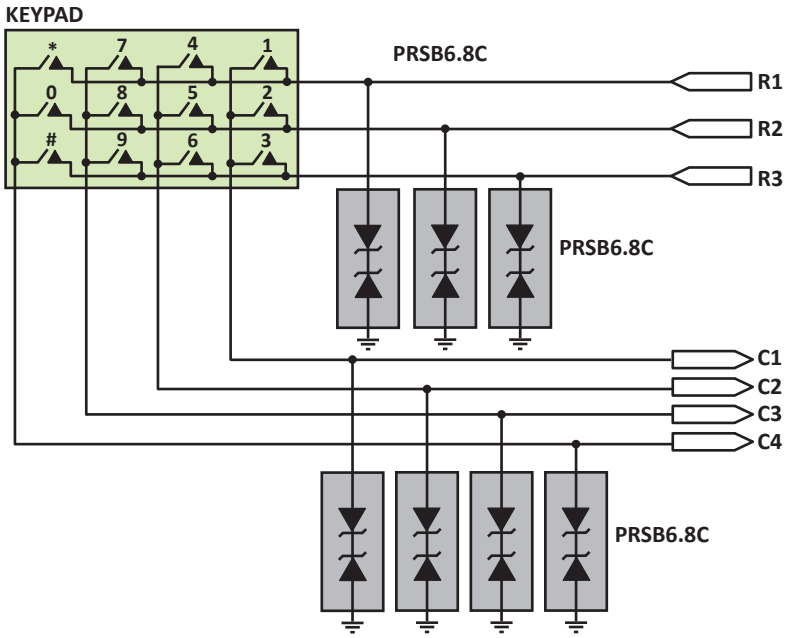

Figure 16. Solution for Key Pad Using PRSB6.8C

OVERVOLTAGE PART SPECIFICATIONS

PART NUMBER	STAND-OFF VOLTAGE V_{WM} VOLTS	BREAKDOWN VOLTAGE $V_{(BR)}$ VOLTS	CLAMPING VOLTAGE V_C VOLTS	PEAK PULSE CURRENT 8/20µs I_{PP} AMPS	MAXIMUM LEAKAGE CURRENT I_D µA	TYPICAL CAPACITANCE C pF	NO. OF LINES	POWER 8/20µs WATTS	PACKAGE
15KPAxxxx	17.0 - 280.0	-	-	-	5000 - 10	-	1	15000*	Axial
2700SM78CAN	78.0	86.0	150.0	15kA	10	-	1	2250kW	Module
30KPAxxxx	30.0 - 360.0	-	-	-	5000 - 2	-	1	30000*	Axial
485ELC	±7.0	-	20.0	500.0	10	25	1	-	Module
5.0SMDJ Series	6.0 - 440.0	6.67 - 492.0	-	-	2000 - 5	-	1	-	DO-214AB
60/90KS200C	180.0	200.0	280, 335	180, 270	10, .05	-	1	60/90kW*	Module
704 Series	31.5	36.0	53.0	300.0	100, 500	-	1	15kW*	Module
CPxx/C Series	5.0 - 24.0	6.0 - 26.7	9.8 - 43.0	1.0	20 - 1	70 - 25	4-5	200	SOT-23-6
GBLCxx/C	3.0 - 24.0	-	7.0 - 43.0	1.0	5 - 1	3	1	350	SOD-323
GPZ Series	28.0	32.0	40.0, 55.0	100.0, 500.0	50, 60	-	1	10/30kW*	Module
PHP/PIP Series	12.0 - 708.0	-	-	-	250	-	1	7.5/15kW*	Module
PLC03-3.3	3.0	2.8	18.0	100.0	2	12	1	1800	SO-8
PLCDA Series	3.3 - 24.0	4.5 - 26.7	7.0 - 43.0	1.0	125 - 1	5	2	500	SO-8
PRSB6.8C	4.7	5.7	17.5	3.0	0.5	15	1	50	DFN-2
PSDxx/C	3.3 - 36.0	-	6.5 - 60.0	1.0	125 - 1	500 - 35	1	500	SOD-323
PSDxxHP	5.0 - 12.0	6.0 - 13.3	9.8, 19.1	1.0	20, 2	800, 440	1	1000	SOD-323
PSLCxx/C	3.3 - 24.0	-	9.0 - 30.0	5.0	125 - 1	3	1	350	SOT-143
PSM712	7.0 - 12.0	-	11.0 - 19.0	1.0	20 - 1	75	1	600	SOT-23
PSOTxx/C	3.3 - 36.0	-	6.5 - 51.0	1.0	125 - 1	500 - 60	1	500	SOT-23
PSR05	5.0	6.0	20.0	28.0	5	10	2	500	SOT-143
PUSB6B	5.25	6.0	13.2	35.0	10	15	2	500	SO-8
SM15KPAxx/CAN	17.0 - 220.0	18.9 - 245.0	-	-	5000 - 10	-	1	15000*	Module
SM30KPAxx/CAN	30.0 - 75.0	33.3 - 83.3	-	-	5000 - 10	-	1	30000*	Module
SM3KW24A	24.0	26.7	43.0	69.8	3	-	1	3000*	DFN-2
SM5KW Series	10.0 - 36.0	11.1 - 40.2	-	-	15 - 8	-	1	5000*	DFN-2
SM8LCxx Series	5.0 - 24.0	6.0 - 26.7	9.8 - 40.0	1.0	100 - 4	25	2P	800	SO-8
SMAJ Series	5.0 - 440.0	6.40 - 492.0	-	-	800 - 5	-	1	400*	DO-214AC
SMBJ Series	5.0 - 440.0	6.40 - 492.0	-	-	800 - 5	-	1	600*	DO-214AA
SMCJ Series	5.0 - 440.0	6.40 - 492.0	-	-	1000 - 5		1	1500*	DO-214AB
SMDAxx/C Series	3.3 - 36.0	4.0 - 40.0	7.0 - 65.0	5.0	125 - 1	800 - 45	4	500	SO-8
SMDJ Series	5.0 - 440.0	6.40 - 492.0	-	-	5000 - 2	-	1	3000*	DO-214AB
SRV05-4	5.0	6.0	15.0	5.0	5	2.5	4	500	SOT-23-6
SRV25-4	2.5	3.0	7.4	10.0	0.5	1.7	4	800	DFN-10

1. *10/1000µs waveshape.
2. For detail about each voltage level, please refer to the product datasheet.

OVERCURRENT PART SPECIFICATIONS - FUSES

PART NUMBER	CURRENT RATING AMPS	VOLTAGE RATING DC VOLTS	INTERRUPT RATING DC AMPS	TYPICAL RESISTANCE OHMS	PACKAGE
PF0402F Series	0.200 - 4.00	24	35	4.30 - 0.014	0402
PF0603F Series	0.250 - 6.00	32	50, 35	5.1 - 0.008	0603
PF0603H Series	1.00 - 5.00	32	35	0.24 - 0.013	0603
PF0603S Series	1.00 - 5.00	32	35	0.25 - 0.013	0603
PF1206F Series	0.250 - 8.00	63, 32	50	4.10 - 0.008	1206
PF1206H Series	1.00 - 7.00	63, 32, 24	50, 60	0.41 - 0.012	1206
PF1206S Series	1.00 - 7.00	63, 32, 24	50, 60	0.42 - 0.012	1206

1. For detail about each voltage level, please refer to the product datasheet.

OVERCURRENT PART SPECIFICATIONS - POLYMER PTC DEVICES

PART NUMBER	MAXIMUM HOLDING CURRENT I_H AMPS	MINIMUM TRIP CURRENT I_T AMPS	MAXIMUM INTERRUPT VOLTAGE V_{MAX} VOLTS	MAXIMUM FAULT CURRENT I_{MAX} AMPS	MAXIMUM TIME-TO-TRIP AMPS @ S	TYPICAL POWER DISSPATION P_D WATTS	MAXIMUM RESISTANCE OHMS	PACKAGE
PMPS075-1812	0.75	1.50	24	100	8.0A @ 0.20s	0.60	0.350	1812
PMPS150-1812	1.50	3.00	24	20	8.0A @ 1.50s	0.80	0.110	1812
PMPS150E-1206	1.50	3.00	8	100	8.0A @ 0.30s	0.80	0.120	1206
PMPS200-1812	2.00	3.50	8	100	8.0A @ 2.00s	0.80	0.070	1812
PMPS200D-1210	2.00	4.00	6	50	8.0A @ 5.00s	1.2	0.028	1210
PMPS260C-1812	2.60	5.00	8	100	8.0A @ 4.00s	0.8	0.040	1812
PMPS380E-1206	3.80	7.60	6	50	16.0A @ 5.00s	1.2	0.015	1206

OVERCURRENT PART SPECIFICATIONS - POLYMER PTC DEVICES

PART NUMBER	MAXIMUM HOLDING CURRENT I_H AMPS	TRIP CURRENT I_T AMPS	OPERATING VOLTAGE V_{DC} VOLTS	INTERRUPT CURRENT I_{MAX} AMPS	MAXIMUM TIME-TO-TRIP @ 5_{IH} - T_{TRIP} SECONDS	MAXIMUM POWER DISSPATION P_D WATTS	TYPICAL RESISTANCE OHMS	PACKAGE
PLRO1206-300	3.0	6.0	6	50	4.0	1.0	0.008	1206
PLRO1206-380	3.0	8.0	6	50	4.0	1.0	0.006	1206
PLRO1210-190	1.9	4.9	6	50	4.0	1.0	0.013	1210
PLRO1210-300	3.0	8.0	6	50	4.0	1.0	0.009	1210
PLRO1210-300	3.8	9.0	6	50	4.0	1.0	0.008	1210

COMPANY INFORMATION

In business more than 20 years, ProTek Devices™ is a privately held semiconductor company. The company offers a product line of overvoltage protection and overcurrent protection components. These include transient voltage suppressor array (TVS arrays) avalanche breakdown diode, steering diode TVS array and electronics SMD chip fuses. These components deliver circuit protection in electronic systems from numerous overvoltage and overcurrent events. They include lightning; electrostatic discharge (ESD); nuclear electromagnetic pulses (NEMP); inductive switching; and electromagnetic interference (EMI) / radio frequency interference (RFI). ProTek Devices also offers high performance interface and linear products. They include analog switches; multiplexers; LED drivers; LED wafer die for ESD protection; audio control ICs; RF and related high frequency products.

CONTACT US

ProTek Devices L.P.
2929 South Fair Lane
Tempe, Arizona 85282
USA
Phone: +1 602-431-8101
FAX: +1 602-431-2288

ProTek Devices (Asia Pacific) Pte. Ltd.
8 Ubi Road 2, #06-19, Zervex
Singapore 408538
Phone: +65 6748-8312
FAX: +65 6748-8313

By E-mail:
Asia Sales: asiasales@protekdevices.com
Europe Sales: europesales@protekdevices.com
U.S. Sales: ussales@protekdevices.com
Distributor Sales: distysales@protekdevices.com
Customer Service: service@protekdevices.com
Technical Support: support@protekdevices.com

Web
www.protekdevices.com

ROHS & REACH COMPLIANCE

All devices, with the exception the PAM16AL30A(RoHS, exemption #7) are Lead-Free, RoHS & REACH compliant. These products are designated as "lead free" and meet the requirements of the European Union's restriction on the use of hazardous substances in electrical equipment as stated in (RoHS) direction, 2002/95/EC. ProTek Devices defines "lead free" as products that are compatible with current RoHS requirements for the 6 "banned" substances: Lead (Pb, <1000ppm), Cadmium (Cd, <100ppm), Mercury (Hg, <1000ppm), Hexavalent Chromium (Cr6+, <1000ppm), Poly Brominated Biphenyls (PPB, <1000ppm), Poly Brominated Diphenyl Ethers (PBDE, <1000ppm). This includes the requirements that lead not exceed 0.1% by weight in homogeneous materials.

STANDARD TAPE & REEL NOMENCLATURE

-T7 for 7" Reels
-T13 for 13" Reels
-TS for sample size Reels
Not all products are available in 7" or 13" reels. Quantities per reel vary depending upon package size. Please consult product data sheet or the factory for ordering information regarding a specific part series. All data sheets can be found on ProTek Devices website: www.protekdevices.com

COPYRIGHT © ProTek Devices (2014) - This literature is subject to all applicable copyright laws and is not for resale in any manner.

SPECIFICATIONS: ProTek Devices reserves the right to change the electrical and or mechanical characteristics described herein without notice.

DESIGN CHANGES: ProTek Devices reserves the right to discontinue product lines without notice and that the final judgment concerning selection and specifications is the buyer's and that in furnishing engineering and technical assistance. ProTek Devices assumes no responsibility with respect to the selection or specifications of such products. ProTek Devices makes no warranty, representation or guarantee regarding the suitability of its products for any particular purpose, nor does ProTek Devices assume any liability arising out of the application or use of any product or circuit and specifically disclaims any and all liability without limitation special, consequential or incidental damages.

LIFE SUPPORT POLICY: ProTek Devices products are not authorized for use in life support systems without written consent from the factory.