BENDER +WIRTH

LED HALTER SERIE 430 + 630

LED HOLDER SERIES 430 + 630

Katalog der Standardhalter für **LEDiL** Optiken

Catalogue of standard holders for **LEDiL** Optics

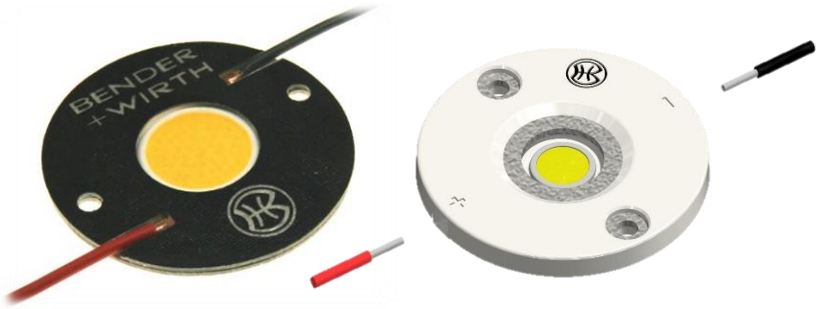

UNSER KONZEPT
FÜR **IHRE**
INDIVIDUELLE
LED MONTAGE

OUR CONCEPT
FOR **YOUR**
INDIVIDUAL
LED MOUNTING

LEDiL®

INHALTSVERZEICHNIS
CONTENT

Hersteller / Supplier	Optik / Optics		Halter Typ / holder type	Seite / Page
COB Halter Hybrid 630 / COB Holder Hybrid 630				
Lowprofile			*6xxz LowProfile*	4
Bayonet50	*Ledil "B50"- Optics*		*6xxz Bayonet50*	9
Hekla	*Ledil Hekla System*		*6xxz Hekla*	14
Bayonet35	*Ledil Amy-B, Yasmeen-B*		*6xxz Bayonet35*	20
3Hook	*Ledil Angela, Molly, Ronda*		*6xxz 3Hook*	23
Lena	*Ledil Lena*		*6xxz Lena*	28
LED Halter 430 / LED Holder 430				
Basishalter / Standard holders			*4xx Typ xx*	33
Ledil	*2x2MX*		*4xx Typ 2x2MX HV*	39
	Clamp System	*Angela, Angelette, Angelina, Molly, Ronda*	*4xx Typ L1 / L2 / L3*	43
	Hekla System	*Barbara-G2, Mirella-G2, Brooke-G2, Carmen, Ronda, Winnie, Zorya*	*4xx Typ L8*	49
	Lena		*4xx Typ L1 / L2 / L3*	55
	PF-System	*Barbara, Mirella*	*4xx Typ L1 / L2*	60
	Saga		*4xx Typ L6*	65
	Stella L1	*Stella A*	*4xx Typ L1*	70
	Stella L4	*Stella HB, HB WWW, Fresnel,RS, G2-VSM*	*4xx Typ L4*	74
	Stella Z1	*Stella T4, VSM, DWC2, G2-T2, G2-T3, G2-T4*	*4xx Typ Z1*	77
	Winnie		*4xx Typ L5*	82
	Zorya		*4xx Typ L7*	87
Zhaga	*Book 3*		*4xx Typ Z1*	92

Ist Ihre COB oder die gewünschte Bauform nicht aufgeführt?
Bitte sprechen Sie uns an.
If your COB or requested shape is not listed, please contact us.

Die dargestellten Halter / Reflektor Kombinationen zeigen lediglich die technische Machbarkeit. Technische Daten und Montagehinweise sind in unserem Technical Guide LED Halter Serie 430 und 630 aufgeführt.
Die Kabelaustritte an den Haltern sind abhängig vom verwendeten COB.
Optische Daten und Datenblätter gibt es auf Anfrage nach Verfügbarkeit beim Reflektorhersteller.
The illustrated holder / reflector combinations only show the technical feasibility.
Technical data and mounting instructions are listed in our Technical Guide LED holder series 430 and 630.
The cable exits of the holders are pending on the COB.
Optical data and datasheets are available upon request and availability by the reflector manufacturer.

Die Informationen in diesem Dokument sind ohne Gewähr und können ohne Vorankündigung geändert werden.
The information in this document is provided without liability and subject to change without notice.

COB HALTER HYBRID
COB HOLDER HYBRID

630

BENDER +WIRTH

Gehäusetyp: Housing:	**LowProfile**	**Größe / Size : 44/50 mm** **Höhe / Height : 3,4 mm**
Beispiele für passende Optiken examples of suitable optics	**LEDiL STELLA-T4, -VSM** **LEDiL STELLA-DWC2** **LEDiL STELLA-G2-T2, -T3, -T4**	

633a/47590 (2 : 1) Version 1: 633x, 634x, 637x, 638x, 641x, 652x, 660x

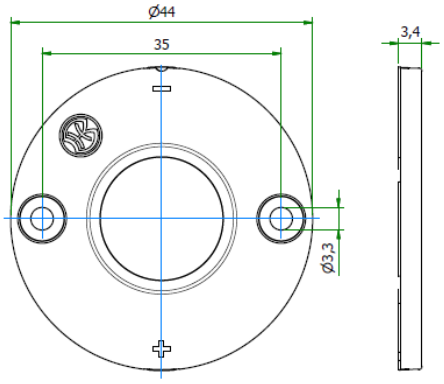

631a/47584 (2 : 1) Version 2: 631x, 632x, 639x, 663x

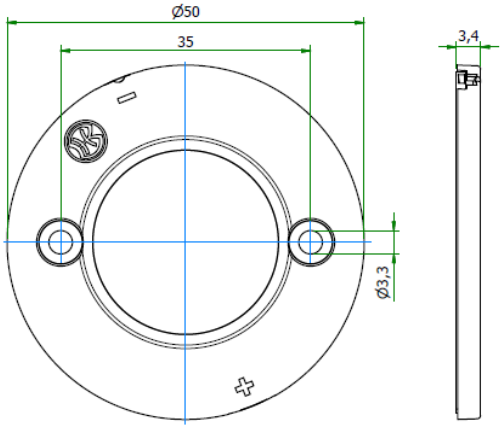

Bemessungsspannung rated voltage	**Standard 250V DC** **optional 450V DC**	**Zulässige COB Abmessungen** Permissible COB dimensions
Bemessungsstrom rated current	**5 A**	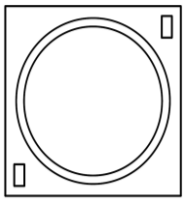 **siehe Einzeldatenblätter im Online Katalog** see data sheets at our web catalogue
Bemessungstemperatur rated operating temperature	**T 120**	
Befestigung fixing	**2 Schrauben M3** 2 screws M3	
max. Drehmonent max. torque	**0,5 Nm**	
Material des Halters material of the holder	**PBT / Mikanit** PBT / Mica	**Zertifikate / certificates**
Kontaktmaterial contactmaterial	**CuSn** CuSn	**Ausweis-Nr.** **File E4729**

Weitere technische Daten und Montagehinweise sind im Technical Guide COB Halterserie 630 enthalten.
Further technical details and mounting instructions are part of the Technical Guide COB holder series 630.

Teilumhüllter Halter für folgende COBs / unenclosed holder for the following COBs:			
Hersteller supplier	**COB Typ** COB Type	**Teile-Nr.** part no.	**Haltervariante** variant of holder
Bridgelux	V3 HD / V4 HD Gen 7,8	**47954**	COB Holder Hybrid 660a LowProfile
Bridgelux	V6 HD Gen 7,8	**47870**	COB Holder Hybrid 634c LowProfile
Bridgelux	V9 HD / V11 HD Gen 7,8	**47862**	COB Holder Hybrid 633d LowProfile
Bridgelux	V6 Gen 8,9 (just 2 pads!)	**47954**	COB Holder Hybrid 660a LowProfile
Bridgelux	V8 Gen 7,8,9 (4 pads)	**47954**	COB Holder Hybrid 660a LowProfile
Bridgelux	V10 Gen 7,8,9	**47866**	COB Holder Hybrid 634b LowProfile
Bridgelux	V13 Gen 7,8,9	**47861**	COB Holder Hybrid 633c LowProfile
Bridgelux	V18 Gen 7,8,9	**47884**	COB Holder Hybrid 639b LowProfile
Bridgelux	V22 Gen 7,8,9	**47856**	COB Holder Hybrid 631b LowProfile
Bridgelux	Vesta DTW 6/9mm Gen 1,2	**47894**	COB Holder Hybrid 652b LowProfile
Bridgelux	Vesta DTW 13/15mm Gen 1,2	**47860**	COB Holder Hybrid 632b LowProfile
Bridgelux	Vesta DTW 18mm Gen 1	**on request**	COB Holder Hybrid 639c LowProfile
Bridgelux	Vesta Tunable 9mm Gen 2	**on request**	Werkzeug fehlt / Tooling required
Bridgelux	Vesta Tunable 13mm Gen 2	**on request**	Werkzeug fehlt / Tooling required
Citizen	CLU 028 / 02J / 02Q	**47659**	COB Holder Hybrid 634a LowProfile
Citizen	CLU 038 / 03H / 03J / 03Q	**47590**	COB Holder Hybrid 633a LowProfile
Citizen	CLU 048 / 04H / 04J / 04Q	**47584**	COB Holder Hybrid 631a LowProfile
Citizen	CLU 7L3 / 7S3	**on request**	Werkzeug fehlt / Tooling required
Citizen	CLU 702 / 703 / 7A2 /7A3 / 7B2	**47659**	COB Holder Hybrid 634a LowProfile
Citizen	CLU 712 / 713	**47861**	COB Holder Hybrid 633c LowProfile
Citizen	CLU 723	**47861**	COB Holder Hybrid 633c LowProfile
Citizen	CLU 733	**47856**	COB Holder Hybrid 631b LowProfile
CREE	CHA 0304 / 0410 / 0612	**47659**	COB Holder Hybrid 634a LowProfile
CREE	CHA 0825	**47590**	COB Holder Hybrid 633a LowProfile
CREE	CMA 1303 / 1306	**47870**	COB Holder Hybrid 634c LowProfile
CREE	CMA 1516	**47462**	COB Holder Hybrid 641a LowProfile
CREE	CMA 1825 / 1840	**47471**	COB Holder Hybrid 637a LowProfile
CREE	CMA 2550	**47586**	COB Holder Hybrid 639a LowProfile
CREE	CMB 1304 / 1306	**47870**	COB Holder Hybrid 634c LowProfile
CREE	CMB 1507 / 1510 / 1516	**47462**	COB Holder Hybrid 641a LowProfile
CREE	CMB 1818 / 1825	**47471**	COB Holder Hybrid 637a LowProfile
CREE	CMB 1840	**47874**	COB Holder Hybrid 637b LowProfile
CREE	CMB 2550	**47586**	COB Holder Hybrid 639a LowProfile
CREE	CMT 1407 / 1412 / 1420	**47659**	COB Holder Hybrid 634a LowProfile
CREE	CMT 1922 / 1925 / 1930 / 1945	**47861**	COB Holder Hybrid 633c LowProfile
CREE	CMT 2850 / 2870 / 2890	**47856**	COB Holder Hybrid 631b LowProfile
CREE	CMU 1003 / 1006 / 1010 / 1013	**47659**	COB Holder Hybrid 634a LowProfile
CREE	CMU 1516 / 1519 / 1526 / 1532	**47590**	COB Holder Hybrid 633a LowProfile
CREE	CMU 2236 / 2239 / 2258 / 2287	**47856**	COB Holder Hybrid 631b LowProfile
CREE	CXB 1304 / 1310	**47870**	COB Holder Hybrid 634c LowProfile

CREE	CXB 1507 / 1512 / 1520	**47462**	COB Holder Hybrid 641a	LowProfile
CREE	CXB 1816 / 1820	**47471**	COB Holder Hybrid 637a	LowProfile
CREE	CXB 1830	**47874**	COB Holder Hybrid 637b	LowProfile
CREE	CXB 2530 / 2540	**47586**	COB Holder Hybrid 639a	LowProfile
Edison	2PHE 03 / 06 / 09 / 13	**47659**	COB Holder Hybrid 634a	LowProfile
Edison	2PHE 15 / 18 / 24 / 30	**47590**	COB Holder Hybrid 633a	LowProfile
Edison	2PHE 55 / 60 / 83	**47584**	COB Holder Hybrid 631a	LowProfile
Lextar	PB 06 / 09 / 13	**47659**	COB Holder Hybrid 634a	LowProfile
Lextar	PB 16 / 19 / 26	**47590**	COB Holder Hybrid 633a	LowProfile
Lextar	PB 38 / 54	**47584**	COB Holder Hybrid 631a	LowProfile
Lumileds	Luxeon 1202s / 1202HD	**47455**	COB Holder Hybrid 652a	LowProfile
Lumileds	Luxeon 1202 / 1203 / 1204HD	**47880**	COB Holder Hybrid 638b	LowProfile
Lumileds	Luxeon 1205HD	**47880**	COB Holder Hybrid 638b	LowProfile
Lumileds	Luxeon 1204 / 1205	**47581**	COB Holder Hybrid 632a	LowProfile
Lumileds	Luxeon 1208 / 1210	**47581**	COB Holder Hybrid 632a	LowProfile
Lumileds	Luxeon 1211	**47856**	COB Holder Hybrid 631b	LowProfile
Lumileds	Luxeon 1213 / 1216 / 1812 / 1816	**47856**	COB Holder Hybrid 631b	LowProfile
Lumileds	CS COB L02 / L04	**47659**	COB Holder Hybrid 634a	LowProfile
Lumileds	CS COB L06 / L08 / L10	**47590**	COB Holder Hybrid 633a	LowProfile
Lumileds	CS COB L11 / L13 / L16	**47584**	COB Holder Hybrid 631a	LowProfile
Lumileds	CS COB R12 / R18	**47584**	COB Holder Hybrid 631a	LowProfile
Lumileds	CX Plus HD S01H4, S0xH6	**47870**	COB Holder Hybrid 634c	LowProfile
Lumileds	CX Plus HD S04H9	**47866**	COB Holder Hybrid 634b	LowProfile
Lumileds	CX Plus S01Fx / S02Fx	**47870**	COB Holder Hybrid 634c	LowProfile
Lumileds	CX Plus M02Fx / M03Fx	**47462**	COB Holder Hybrid 641a	LowProfile
Lumileds	CX Plus L04Fx / L05Fx / L08Fx	**47471**	COB Holder Hybrid 637a	LowProfile
Luminus	CXM-3-xC	**47659**	COB Holder Hybrid 634a	LowProfile
Luminus	CHM-4-BH / CXM-4-xC	**47659**	COB Holder Hybrid 634a	LowProfile
Luminus	CHM-6-BH / CXM-6-xC	**47659**	COB Holder Hybrid 634a	LowProfile
Luminus	CIM/CLM/CXM-9-xC	**47659**	COB Holder Hybrid 634a	LowProfile
Luminus	CHM-9-BH	**47590**	COB Holder Hybrid 633a	LowProfile
Luminus	CXM-11-xC	**47590**	COB Holder Hybrid 633a	LowProfile
Luminus	CGM/CIM/CLM/CXM-14-xC	**47590**	COB Holder Hybrid 633a	LowProfile
Luminus	CXM-18 Gen6	**47584**	COB Holder Hybrid 631a	LowProfile
Luminus	CGM/CIM/CLM/CXM-22-xC	**47584**	COB Holder Hybrid 631a	LowProfile
Luminus	CDM-6 / CDM-9Gen1 DtW	**47894**	COB Holder Hybrid 652b	LowProfile
Luminus	CDM-9 Gen2 DtW	**47860**	COB Holder Hybrid 632b	LowProfile
Luminus	CDM-14/CDM-18 DtW	**47860**	COB Holder Hybrid 632b	LowProfile
Luxtech	COB-WD-10-1512	**47455**	COB Holder Hybrid 652a	LowProfile
Luxtech	COB-WD-17-2420	**47581**	COB Holder Hybrid 632a	LowProfile
Nichia	NV..S007Z / NF..T012B	**47455**	COB Holder Hybrid 652a	LowProfile
Nichia	NF..S024B / NT..S024B	**47455**	COB Holder Hybrid 652a	LowProfile
Nichia	NJ..S024Z	**47455**	COB Holder Hybrid 652a	LowProfile

Nichia	NV..L016Z / NV..L024Z	**47465**	COB Holder Hybrid 638a	LowProfile
Nichia	NF..L036B / NF..L048B	**47465**	COB Holder Hybrid 638a	LowProfile
Nichia	NF..L060B	**47465**	COB Holder Hybrid 638a	LowProfile
Nichia	NV..J048Z / NF..J108B	**47953**	COB Holder Hybrid 663a	LowProfile
Nichia	NF..J130B	**47953**	COB Holder Hybrid 663a	LowProfile
Philips	Fortimo SLM12xx .. 1215 G7	**47455**	COB Holder Hybrid 652a	LowProfile
Philips	Fortimo SLM12xx .. 1619 G7	**47880**	COB Holder Hybrid 638b	LowProfile
Philips	Fortimo SLM12xx .. 2024 G7	**47581**	COB Holder Hybrid 632a	LowProfile
Philips	Fortimo SLM12xx .. 2828 G7	**47856**	COB Holder Hybrid 631b	LowProfile
Philips	Fortimo SLM12xx .. 1313 G7N	**47659**	COB Holder Hybrid 634a	LowProfile
Philips	Fortimo SLM12xx .. 1919 G7N	**47590**	COB Holder Hybrid 633a	LowProfile
Philips	Fortimo SLM12xx .. 2828 G7N	**47856**	COB Holder Hybrid 631b	LowProfile
Philips	Fortimo SLM13xx .. 2024 G8 UHE	**47581**	COB Holder Hybrid 632a	LowProfile
Philips	Fortimo SLM13xx .. 2828 G8 UHE	**47856**	COB Holder Hybrid 631b	LowProfile
Prolight Opto	PASB	**47659**	COB Holder Hybrid 634a	LowProfile
Prolight Opto	PASQ/PAPQ DimToWarm	**47659**	COB Holder Hybrid 634a	LowProfile
Prolight Opto	PDSQ DimToWarm	**47894**	COB Holder Hybrid 652b	LowProfile
Prolight Opto	PDSR DimToWarm	**47860**	COB Holder Hybrid 632b	LowProfile
Samsung	LC 010C	**47659**	COB Holder Hybrid 634a	LowProfile
Samsung	LC 020C / 030C / 040C	**47861**	COB Holder Hybrid 633c	LowProfile
Samsung	LC 003D / 006D	**47659**	COB Holder Hybrid 634a	LowProfile
Samsung	LC 009D / 013D	**47659**	COB Holder Hybrid 634a	LowProfile
Samsung	LC 016D / 019D	**47861**	COB Holder Hybrid 633c	LowProfile
Samsung	LC 026D / 033D	**47861**	COB Holder Hybrid 633c	LowProfile
Samsung	LC 040D / 060D / 080D	**47856**	COB Holder Hybrid 631b	LowProfile
Seoul	SAW* 0661	**47866**	COB Holder Hybrid 634b	LowProfile
Seoul	SAW* 1062 / 1063	**47866**	COB Holder Hybrid 634b	LowProfile
Seoul	SAW* 1564 / 1565 / 1566	**47861**	COB Holder Hybrid 633c	LowProfile
Seoul	SAW* 22AA / 2296	**47584**	COB Holder Hybrid 631a	LowProfile
Seoul	SAW* 2298 / 226A	**47584**	COB Holder Hybrid 631a	LowProfile
Tridonic	SLE ADV8 LES 04 / 06	**47659**	COB Holder Hybrid 634a	LowProfile
Tridonic	SLE ADV8 LES 09	**47659**	COB Holder Hybrid 634a	LowProfile
Tridonic	SLE ADV8 LES 13	**47861**	COB Holder Hybrid 633c	LowProfile
Tridonic	SLE ADV8 LES 15	**47861**	COB Holder Hybrid 633c	LowProfile
Tridonic	SLE ADV8 LES 17	**47856**	COB Holder Hybrid 631b	LowProfile
Tridonic	SLE ADV8 LES 21	**47856**	COB Holder Hybrid 631b	LowProfile
Tridonic	SLE SNC8 LES 06	**47659**	COB Holder Hybrid 634a	LowProfile
Tridonic	SLE SNC8 LES 09	**47659**	COB Holder Hybrid 634a	LowProfile
Tridonic	SLE SNC8 LES 15	**47861**	COB Holder Hybrid 633c	LowProfile
VS Lighting	DMS 102 ***W	**47659**	COB Holder Hybrid 634a	LowProfile
VS Lighting	DMS 124 ***W	**47659**	COB Holder Hybrid 634a	LowProfile
VS Lighting	DMS 125 / 126 / 128 ***W	**47590**	COB Holder Hybrid 633a	LowProfile
VS Lighting	DMS 120 ***W	**47584**	COB Holder Hybrid 631a	LowProfile

VS Lighting	DMS 12C / 18B ***W	**47584**	COB Holder Hybrid 631a	LowProfile
VS Lighting	DMS 1208J	**47590**	COB Holder Hybrid 633a	LowProfile
VS Lighting	DMS 1212J / 1812J	**47584**	COB Holder Hybrid 631a	LowProfile
VS Lighting	VCA 042	**47866**	COB Holder Hybrid 634b	LowProfile
VS Lighting	VCA2 122 / 123 / 124	**47866**	COB Holder Hybrid 634b	LowProfile
VS Lighting	VCA2 126 / 128	**47861**	COB Holder Hybrid 633c	LowProfile
VS Lighting	VCA2 1211 / 1213	**47856**	COB Holder Hybrid 631b	LowProfile
VS Lighting	WU-M-618 DimToWarm	**47659**	COB Holder Hybrid 634a	LowProfile
Xicato	XOB 04	**47866**	COB Holder Hybrid 634b	LowProfile
Xicato	XOB 06 (B)	**47866**	COB Holder Hybrid 634b	LowProfile
Xicato	XOB 09	**47659**	COB Holder Hybrid 634a	LowProfile
Xicato	XOB 14	**47590**	COB Holder Hybrid 633a	LowProfile
Xicato	XOB 23	**47584**	COB Holder Hybrid 631a	LowProfile

COB HALTER HYBRID
COB HOLDER HYBRID

630

BENDER +WIRTH

Gehäusetyp: Housing:	**Bayonet50**	**Größe / Size : 50 mm** **Höhe / Height : 4,9 mm**

Beispiele für passende Optiken examples of suitable optics	**LEDiL ANGELA-B, ANGELINA-B, ANGELETTE-B** **LEDiL ZORYA-B** **LEDiL ADELIA-B 50/70/110**

633a/47420 (2 : 1)

Version 1: 633x, 634x, 637x, 638x, 641x, 652x, 660x

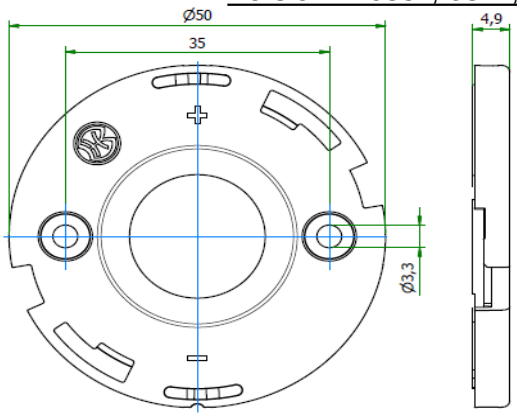

631a/47512 (2 : 1)

Version 2: 631x, 632x, 639x, 663x

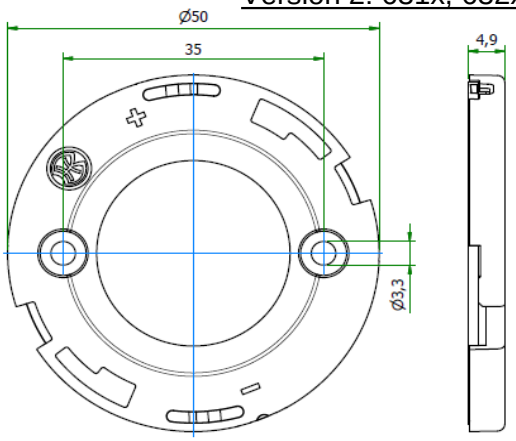

Bemessungsspannung rated voltage	**Standard 250V DC** **optional 450V DC**
Bemessungsstrom rated current	**5 A**
Bemessungstemperatur rated operating temperature	**T 120**
Befestigung fixing	**2 Schrauben M3** 2 screws M3
max. Drehmonent max. torque	**0,5 Nm**
Material des Halters material of the holder	**PBT / Mikanit** PBT / Mica
Kontaktmaterial contactmaterial	**CuSn** CuSn

Zulässige COB Abmessungen
Permissible COB dimensions

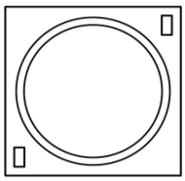

siehe Einzeldatenblätter im Online Katalog

see data sheets at our web catalogue

Zertifikate / certificates

Ausweis-Nr.

File E4729

Weitere technische Daten und Montagehinweise sind im Technical Guide COB Halterserie 630 enthalten.
Further technical details and mounting instructions are part of the Technical Guide COB holder series 630.

Teilumhüllter Halter für folgende COBs / unenclosed holder for the following COBs:			
Hersteller supplier	**COB Typ** COB Type	**Teile-Nr.** part no.	**Haltervariante** variant of holder
Bridgelux	V3 HD / V4 HD Gen 7,8	**47955**	COB Holder Hybrid 660a Bayonet50
Bridgelux	V6 HD Gen 7,8	**47414**	COB Holder Hybrid 634c Bayonet50
Bridgelux	V9 HD / V11 HD Gen 7,8	**47423**	COB Holder Hybrid 633d Bayonet50
Bridgelux	V6 Gen 8,9 (just 2 pads!)	**47955**	COB Holder Hybrid 660a Bayonet50
Bridgelux	V8 Gen 7,8,9 (4 pads)	**47955**	COB Holder Hybrid 660a Bayonet50
Bridgelux	V10 Gen 7,8,9	**47413**	COB Holder Hybrid 634b Bayonet50
Bridgelux	V13 Gen 7,8,9	**47422**	COB Holder Hybrid 633c Bayonet50
Bridgelux	V18 Gen 7,8,9	**47539**	COB Holder Hybrid 639b Bayonet50
Bridgelux	V22 Gen 7,8,9	**47528**	COB Holder Hybrid 631b Bayonet50
Bridgelux	Vesta DTW 6/9mm Gen 1,2	**47890**	COB Holder Hybrid 652b Bayonet50
Bridgelux	Vesta DTW 13/15mm Gen 1,2	**47857**	COB Holder Hybrid 632b Bayonet50
Bridgelux	Vesta DTW 18mm Gen 1	**on request**	COB Holder Hybrid 639c Bayonet50
Bridgelux	Vesta Tunable 9mm Gen 2	**on request**	Werkzeug fehlt / Tooling required
Bridgelux	Vesta Tunable 13mm Gen 2	**on request**	Werkzeug fehlt / Tooling required
Citizen	CLU 028 / 02J / 02Q	**47412**	COB Holder Hybrid 634a Bayonet50
Citizen	CLU 038 / 03H / 03J / 03Q	**47420**	COB Holder Hybrid 633a Bayonet50
Citizen	CLU 048 / 04H / 04J / 04Q	**47512**	COB Holder Hybrid 631a Bayonet50
Citizen	CLU 7L3 / 7S3	**on request**	Werkzeug fehlt / Tooling required
Citizen	CLU 702 / 703 / 7A2 /7A3 / 7B2	**47412**	COB Holder Hybrid 634a Bayonet50
Citizen	CLU 712 / 713	**47422**	COB Holder Hybrid 633c Bayonet50
Citizen	CLU 723	**47422**	COB Holder Hybrid 633c Bayonet50
Citizen	CLU 733	**47528**	COB Holder Hybrid 631b Bayonet50
CREE	CHA 0304 / 0410 / 0612	**47412**	COB Holder Hybrid 634a Bayonet50
CREE	CHA 0825	**47420**	COB Holder Hybrid 633a Bayonet50
CREE	CMA 1303 / 1306	**47414**	COB Holder Hybrid 634c Bayonet50
CREE	CMA 1516	**47458**	COB Holder Hybrid 641a Bayonet50
CREE	CMA 1825 / 1840	**47468**	COB Holder Hybrid 637a Bayonet50
CREE	CMA 2550	**47538**	COB Holder Hybrid 639a Bayonet50
CREE	CMB 1304 / 1306	**47414**	COB Holder Hybrid 634c Bayonet50
CREE	CMB 1507 / 1510 / 1516	**47458**	COB Holder Hybrid 641a Bayonet50
CREE	CMB 1818 / 1825	**47468**	COB Holder Hybrid 637a Bayonet50
CREE	CMB 1840	**47534**	COB Holder Hybrid 637b Bayonet50
CREE	CMB 2550	**47538**	COB Holder Hybrid 639a Bayonet50
CREE	CMT 1407 / 1412 / 1420	**47412**	COB Holder Hybrid 634a Bayonet50
CREE	CMT 1922 / 1925 / 1930 / 1945	**47422**	COB Holder Hybrid 633c Bayonet50
CREE	CMT 2850 / 2870 / 2890	**47528**	COB Holder Hybrid 631b Bayonet50
CREE	CMU 1003 / 1006 / 1010 / 1013	**47412**	COB Holder Hybrid 634a Bayonet50
CREE	CMU 1516 / 1519 / 1526 / 1532	**47420**	COB Holder Hybrid 633a Bayonet50
CREE	CMU 2236 / 2239 / 2258 / 2287	**47528**	COB Holder Hybrid 631b Bayonet50
CREE	CXB 1304 / 1310	**47414**	COB Holder Hybrid 634c Bayonet50

CREE	CXB 1507 / 1512 / 1520	**47458**	COB Holder Hybrid 641a	Bayonet50
CREE	CXB 1816 / 1820	**47468**	COB Holder Hybrid 637a	Bayonet50
CREE	CXB 1830	**47534**	COB Holder Hybrid 637b	Bayonet50
CREE	CXB 2530 / 2540	**47538**	COB Holder Hybrid 639a	Bayonet50
Edison	2PHE 03 / 06 / 09 / 13	**47412**	COB Holder Hybrid 634a	Bayonet50
Edison	2PHE 15 / 18 / 24 / 30	**47420**	COB Holder Hybrid 633a	Bayonet50
Edison	2PHE 55 / 60 / 83	**47512**	COB Holder Hybrid 631a	Bayonet50
Lextar	PB 06 / 09 / 13	**47412**	COB Holder Hybrid 634a	Bayonet50
Lextar	PB 16 / 19 / 26	**47420**	COB Holder Hybrid 633a	Bayonet50
Lextar	PB 38 / 54	**47512**	COB Holder Hybrid 631a	Bayonet50
Lumileds	Luxeon 1202s / 1202HD	**47453**	COB Holder Hybrid 652a	Bayonet50
Lumileds	Luxeon 1202 / 1203 / 1204HD	**47876**	COB Holder Hybrid 638b	Bayonet50
Lumileds	Luxeon 1205HD	**47876**	COB Holder Hybrid 638b	Bayonet50
Lumileds	Luxeon 1204 / 1205	**47449**	COB Holder Hybrid 632a	Bayonet50
Lumileds	Luxeon 1208 / 1210	**47449**	COB Holder Hybrid 632a	Bayonet50
Lumileds	Luxeon 1211	**47528**	COB Holder Hybrid 631b	Bayonet50
Lumileds	Luxeon 1213 / 1216 / 1812 / 1816	**47528**	COB Holder Hybrid 631b	Bayonet50
Lumileds	CS COB L02 / L04	**47412**	COB Holder Hybrid 634a	Bayonet50
Lumileds	CS COB L06 / L08 / L10	**47420**	COB Holder Hybrid 633a	Bayonet50
Lumileds	CS COB L11 / L13 / L16	**47512**	COB Holder Hybrid 631a	Bayonet50
Lumileds	CS COB R12 / R18	**47512**	COB Holder Hybrid 631a	Bayonet50
Lumileds	CX Plus HD S01H4, S0xH6	**47414**	COB Holder Hybrid 634c	Bayonet50
Lumileds	CX Plus HD S04H9	**47413**	COB Holder Hybrid 634b	Bayonet50
Lumileds	CX Plus S01Fx / S02Fx	**47414**	COB Holder Hybrid 634c	Bayonet50
Lumileds	CX Plus M02Fx / M03Fx	**47458**	COB Holder Hybrid 641a	Bayonet50
Lumileds	CX Plus L04Fx / L05Fx / L08Fx	**47468**	COB Holder Hybrid 637a	Bayonet50
Luminus	CXM-3-xC	**47412**	COB Holder Hybrid 634a	Bayonet50
Luminus	CHM-4-BH / CXM-4-xC	**47412**	COB Holder Hybrid 634a	Bayonet50
Luminus	CHM-6-BH / CXM-6-xC	**47412**	COB Holder Hybrid 634a	Bayonet50
Luminus	CIM/CLM/CXM-9-xC	**47412**	COB Holder Hybrid 634a	Bayonet50
Luminus	CHM-9-BH	**47420**	COB Holder Hybrid 633a	Bayonet50
Luminus	CXM-11-xC	**47420**	COB Holder Hybrid 633a	Bayonet50
Luminus	CGM/CIM/CLM/CXM-14-xC	**47420**	COB Holder Hybrid 633a	Bayonet50
Luminus	CXM-18 Gen6	**47512**	COB Holder Hybrid 631a	Bayonet50
Luminus	CGM/CIM/CLM/CXM-22-xC	**47512**	COB Holder Hybrid 631a	Bayonet50
Luminus	CDM-6 / CDM-9Gen1 DtW	**47890**	COB Holder Hybrid 652b	Bayonet50
Luminus	CDM-9 Gen2 DtW	**47857**	COB Holder Hybrid 632b	Bayonet50
Luminus	CDM-14/CDM-18 DtW	**47857**	COB Holder Hybrid 632b	Bayonet50
Luxtech	COB-WD-10-1512	**47453**	COB Holder Hybrid 652a	Bayonet50
Luxtech	COB-WD-17-2420	**47449**	COB Holder Hybrid 632a	Bayonet50
Nichia	NV..S007Z / NF..T012B	**47453**	COB Holder Hybrid 652a	Bayonet50
Nichia	NF..S024B / NT..S024B	**47453**	COB Holder Hybrid 652a	Bayonet50
Nichia	NJ..S024Z	**47453**	COB Holder Hybrid 652a	Bayonet50

Nichia	NV..L016Z / NV..L024Z	**47463**	COB Holder Hybrid 638a	Bayonet50
Nichia	NF..L036B / NF..L048B	**47463**	COB Holder Hybrid 638a	Bayonet50
Nichia	NF..L060B	**47463**	COB Holder Hybrid 638a	Bayonet50
Nichia	NV..J048Z / NF..J108B	**47932**	COB Holder Hybrid 663a	Bayonet50
Nichia	NF..J130B	**47932**	COB Holder Hybrid 663a	Bayonet50
Philips	Fortimo SLM12xx .. 1215 G7	**47453**	COB Holder Hybrid 652a	Bayonet50
Philips	Fortimo SLM12xx .. 1619 G7	**47876**	COB Holder Hybrid 638b	Bayonet50
Philips	Fortimo SLM12xx .. 2024 G7	**47449**	COB Holder Hybrid 632a	Bayonet50
Philips	Fortimo SLM12xx .. 2828 G7	**47528**	COB Holder Hybrid 631b	Bayonet50
Philips	Fortimo SLM12xx .. 1313 G7N	**47412**	COB Holder Hybrid 634a	Bayonet50
Philips	Fortimo SLM12xx .. 1919 G7N	**47420**	COB Holder Hybrid 633a	Bayonet50
Philips	Fortimo SLM12xx .. 2828 G7N	**47528**	COB Holder Hybrid 631b	Bayonet50
Philips	Fortimo SLM13xx .. 2024 G8 UHE	**47449**	COB Holder Hybrid 632a	Bayonet50
Philips	Fortimo SLM13xx .. 2828 G8 UHE	**47528**	COB Holder Hybrid 631b	Bayonet50
Prolight Opto	PASB	**47412**	COB Holder Hybrid 634a	Bayonet50
Prolight Opto	PASQ/PAPQ DimToWarm	**47412**	COB Holder Hybrid 634a	Bayonet50
Prolight Opto	PDSQ DimToWarm	**47890**	COB Holder Hybrid 652b	Bayonet50
Prolight Opto	PDSR DimToWarm	**47857**	COB Holder Hybrid 632b	Bayonet50
Samsung	LC 010C	**47412**	COB Holder Hybrid 634a	Bayonet50
Samsung	LC 020C / 030C / 040C	**47422**	COB Holder Hybrid 633c	Bayonet50
Samsung	LC 003D / 006D	**47412**	COB Holder Hybrid 634a	Bayonet50
Samsung	LC 009D / 013D	**47412**	COB Holder Hybrid 634a	Bayonet50
Samsung	LC 016D / 019D	**47422**	COB Holder Hybrid 633c	Bayonet50
Samsung	LC 026D / 033D	**47422**	COB Holder Hybrid 633c	Bayonet50
Samsung	LC 040D / 060D / 080D	**47528**	COB Holder Hybrid 631b	Bayonet50
Seoul	SAW* 0661	**47413**	COB Holder Hybrid 634b	Bayonet50
Seoul	SAW* 1062 / 1063	**47413**	COB Holder Hybrid 634b	Bayonet50
Seoul	SAW* 1564 / 1565 / 1566	**47422**	COB Holder Hybrid 633c	Bayonet50
Seoul	SAW* 22AA / 2296	**47512**	COB Holder Hybrid 631a	Bayonet50
Seoul	SAW* 2298 / 226A	**47512**	COB Holder Hybrid 631a	Bayonet50
Tridonic	SLE ADV8 LES 04 / 06	**47412**	COB Holder Hybrid 634a	Bayonet50
Tridonic	SLE ADV8 LES 09	**47412**	COB Holder Hybrid 634a	Bayonet50
Tridonic	SLE ADV8 LES 13	**47422**	COB Holder Hybrid 633c	Bayonet50
Tridonic	SLE ADV8 LES 15	**47422**	COB Holder Hybrid 633c	Bayonet50
Tridonic	SLE ADV8 LES 17	**47528**	COB Holder Hybrid 631b	Bayonet50
Tridonic	SLE ADV8 LES 21	**47528**	COB Holder Hybrid 631b	Bayonet50
Tridonic	SLE SNC8 LES 06	**47412**	COB Holder Hybrid 634a	Bayonet50
Tridonic	SLE SNC8 LES 09	**47412**	COB Holder Hybrid 634a	Bayonet50
Tridonic	SLE SNC8 LES 15	**47422**	COB Holder Hybrid 633c	Bayonet50
VS Lighting	DMS 102 ***W	**47412**	COB Holder Hybrid 634a	Bayonet50
VS Lighting	DMS 124 ***W	**47412**	COB Holder Hybrid 634a	Bayonet50
VS Lighting	DMS 125 / 126 / 128 ***W	**47420**	COB Holder Hybrid 633a	Bayonet50
VS Lighting	DMS 120 ***W	**47512**	COB Holder Hybrid 631a	Bayonet50

VS Lighting	DMS 12C / 18B ***W	**47512**	COB Holder Hybrid 631a	Bayonet50
VS Lighting	DMS 1208J	**47420**	COB Holder Hybrid 633a	Bayonet50
VS Lighting	DMS 1212J / 1812J	**47512**	COB Holder Hybrid 631a	Bayonet50
VS Lighting	VCA 042	**47413**	COB Holder Hybrid 634b	Bayonet50
VS Lighting	VCA2 122 / 123 / 124	**47413**	COB Holder Hybrid 634b	Bayonet50
VS Lighting	VCA2 126 / 128	**47422**	COB Holder Hybrid 633c	Bayonet50
VS Lighting	VCA2 1211 / 1213	**47528**	COB Holder Hybrid 631b	Bayonet50
VS Lighting	WU-M-618 DimToWarm	**47412**	COB Holder Hybrid 634a	Bayonet50
Xicato	XOB 04	**47413**	COB Holder Hybrid 634b	Bayonet50
Xicato	XOB 06 (B)	**47413**	COB Holder Hybrid 634b	Bayonet50
Xicato	XOB 09	**47412**	COB Holder Hybrid 634a	Bayonet50
Xicato	XOB 14	**47420**	COB Holder Hybrid 633a	Bayonet50
Xicato	XOB 23	**47512**	COB Holder Hybrid 631a	Bayonet50

COB HALTER HYBRID
COB HOLDER HYBRID

630

BENDER +WIRTH

Gehäusetyp: Housing:	**Hekla**	**Größe / Size : 44/50 mm** **Höhe / Height : 5,5 mm**
Beispiele für passende Optiken examples of suitable optics	**LEDiL BARBARA-G2, MIRELLA-G2, BROOKE-G2, CARMEN 50/70, ZORYA-C** **LEDiL ADELIA 50/70/110, ILONA/ILONA ZOOM, RONDA-C, WINNIE-C** **LEDiL AMY/AMY ZOOM (-C) 50/70, YASMEEN/YASMEEN ZOOM (-C) 50/70**	

633a/47495 (2 : 1) Version 1: 633x, 634x, 637x, 638x, 641x, 652x, 660x

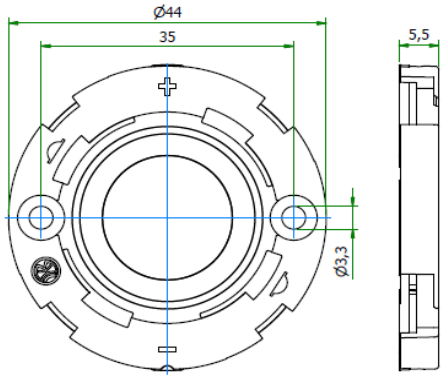

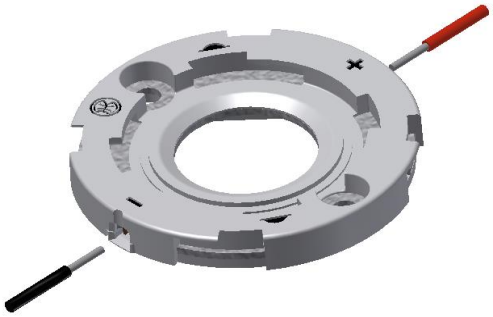

663a/48366 (2 : 1) Version 2: 631x, 632x, 639x, 663x

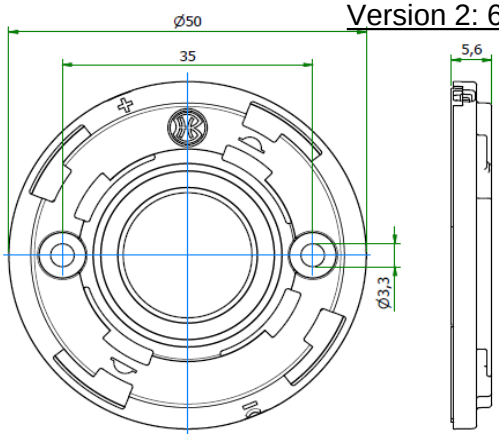

Bemessungsspannung rated voltage	**Standard 250V DC** **optional 450V DC**	**Zulässige COB Abmessungen** Permissible COB dimensions
Bemessungsstrom rated current	**5 A**	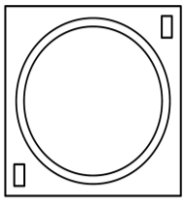 **siehe Einzeldatenblätter im Online Katalog** see data sheets at our web catalogue
Bemessungstemperatur rated operating temperature	**T 120**	
Befestigung fixing	**2 Schrauben M3** 2 screws M3	
max. Drehmonent max. torque	**0,5 Nm**	
Material des Halters material of the holder	**PBT / Mikanit** PBT / Mica	**Zertifikate / certificates**
Kontaktmaterial contactmaterial	**CuSn** CuSn	**Ausweis-Nr.** **File E4729**

Weitere technische Daten und Montagehinweise sind im Technical Guide COB Halterserie 630 enthalten.
Further technical details and mounting instructions are part of the Technical Guide COB holder series 630.

COB HALTER HYBRID
COB HOLDER HYBRID

630

BENDER +WIRTH

Teilumhüllter Halter für folgende COBs / unenclosed holder for the following COBs:			
Hersteller supplier	**COB Typ** COB Type	**Teile-Nr.** part no.	**Haltervariante** variant of holder
Bridgelux	V3 HD / V4 HD Gen 7,8	**47928**	COB Holder Hybrid 660a Hekla
Bridgelux	V6 HD Gen 7,8	**47868**	COB Holder Hybrid 634c Hekla
Bridgelux	V9 HD / V11 HD Gen 7,8	**47561**	COB Holder Hybrid 633d Hekla
Bridgelux	V6 Gen 8,9 (just 2 pads!)	**47928**	COB Holder Hybrid 660a Hekla
Bridgelux	V8 Gen 7,8,9 (4 pads)	**47928**	COB Holder Hybrid 660a Hekla
Bridgelux	V10 Gen 7,8,9	**47864**	COB Holder Hybrid 634b Hekla
Bridgelux	V13 Gen 7,8,9	**47560**	COB Holder Hybrid 633c Hekla
Bridgelux	V18 Gen 7,8,9	**48218**	COB Holder Hybrid 639b Hekla XL
Bridgelux	V22 Gen 7,8,9	**48220**	COB Holder Hybrid 631b Hekla XL
Bridgelux	Vesta DTW 6/9mm Gen 1,2	**47892**	COB Holder Hybrid 652b Hekla
Bridgelux	Vesta DTW 13/15mm Gen 1,2	**48184**	COB Holder Hybrid 632b Hekla XL
Bridgelux	Vesta DTW 18mm Gen 1	**on request**	COB Holder Hybrid 639c Hekla XL
Bridgelux	Vesta Tunable 9mm Gen 2	**50063**	COB Holder Hybrid 689a Hekla Tunable
Bridgelux	Vesta Tunable 13mm Gen 2	**50060**	COB Holder Hybrid 692a Hekla Tunable
Citizen	CLU 028 / 02J / 02Q	**47505**	COB Holder Hybrid 634a Hekla
Citizen	CLU 038 / 03H / 03J / 03Q	**47495**	COB Holder Hybrid 633a Hekla
Citizen	CLU 048 / 04H / 04J / 04Q	**48219**	COB Holder Hybrid 631a Hekla XL
Citizen	CLU 7L3 / 7S3	**on request**	Werkzeug fehlt / Tooling required
Citizen	CLU 702 / 703 / 7A2 /7A3 / 7B2	**47505**	COB Holder Hybrid 634a Hekla
Citizen	CLU 712 / 713	**47560**	COB Holder Hybrid 633c Hekla
Citizen	CLU 723	**47560**	COB Holder Hybrid 633c Hekla
Citizen	CLU 733	**48220**	COB Holder Hybrid 631b Hekla XL
CREE	CHA 0304 / 0410 / 0612	**47505**	COB Holder Hybrid 634a Hekla
CREE	CHA 0825	**47495**	COB Holder Hybrid 633a Hekla
CREE	CMA 1303 / 1306	**47868**	COB Holder Hybrid 634c Hekla
CREE	CMA 1516	**47510**	COB Holder Hybrid 641a Hekla
CREE	CMA 1825 / 1840	**47509**	COB Holder Hybrid 637a Hekla
CREE	CMA 2550	**48180**	COB Holder Hybrid 639a Hekla XL
CREE	CMB 1304 / 1306	**47868**	COB Holder Hybrid 634c Hekla
CREE	CMB 1507 / 1510 / 1516	**47510**	COB Holder Hybrid 641a Hekla
CREE	CMB 1818 / 1825	**47509**	COB Holder Hybrid 637a Hekla
CREE	CMB 1840	**47872**	COB Holder Hybrid 637b Hekla
CREE	CMB 2550	**48180**	COB Holder Hybrid 639a Hekla XL
CREE	CMT 1407 / 1412 / 1420	**47505**	COB Holder Hybrid 634a Hekla
CREE	CMT 1922 / 1925 / 1930 / 1945	**47560**	COB Holder Hybrid 633c Hekla
CREE	CMT 2850 / 2870 / 2890	**48220**	COB Holder Hybrid 631b Hekla XL
CREE	CMU 1003 / 1006 / 1010 / 1013	**47505**	COB Holder Hybrid 634a Hekla
CREE	CMU 1516 / 1519 / 1526 / 1532	**47495**	COB Holder Hybrid 633a Hekla
CREE	CMU 2236 / 2239 / 2258 / 2287	**48220**	COB Holder Hybrid 631b Hekla XL
CREE	CXB 1304 / 1310	**47868**	COB Holder Hybrid 634c Hekla

CREE	CXB 1507 / 1512 / 1520	**47510**	COB Holder Hybrid 641a	Hekla
CREE	CXB 1816 / 1820	**47509**	COB Holder Hybrid 637a	Hekla
CREE	CXB 1830	**47872**	COB Holder Hybrid 637b	Hekla
CREE	CXB 2530 / 2540	**48180**	COB Holder Hybrid 639a	Hekla XL
Edison	2PHE 03 / 06 / 09 / 13	**47505**	COB Holder Hybrid 634a	Hekla
Edison	2PHE 15 / 18 / 24 / 30	**47495**	COB Holder Hybrid 633a	Hekla
Edison	2PHE 55 / 60 / 83	**48219**	COB Holder Hybrid 631a	Hekla XL
Lextar	PB 06 / 09 / 13	**47505**	COB Holder Hybrid 634a	Hekla
Lextar	PB 16 / 19 / 26	**47495**	COB Holder Hybrid 633a	Hekla
Lextar	PB 38 / 54	**48219**	COB Holder Hybrid 631a	Hekla XL
Lumileds	Luxeon 1202s / 1202HD	**47889**	COB Holder Hybrid 652a	Hekla
Lumileds	Luxeon 1202 / 1203 / 1204HD	**47878**	COB Holder Hybrid 638b	Hekla
Lumileds	Luxeon 1205HD	**47878**	COB Holder Hybrid 638b	Hekla
Lumileds	Luxeon 1204 / 1205	**48217**	COB Holder Hybrid 632a	Hekla XL
Lumileds	Luxeon 1208 / 1210	**48217**	COB Holder Hybrid 632a	Hekla XL
Lumileds	Luxeon 1211	**48220**	COB Holder Hybrid 631b	Hekla XL
Lumileds	Luxeon 1213 / 1216 / 1812 / 1816	**48220**	COB Holder Hybrid 631b	Hekla XL
Lumileds	CS COB L02 / L04	**47505**	COB Holder Hybrid 634a	Hekla
Lumileds	CS COB L06 / L08 / L10	**47495**	COB Holder Hybrid 633a	Hekla
Lumileds	CS COB L11 / L13 / L16	**48219**	COB Holder Hybrid 631a	Hekla XL
Lumileds	CS COB R12 / R18	**48219**	COB Holder Hybrid 631a	Hekla XL
Lumileds	CX Plus HD S01H4, S0xH6	**47868**	COB Holder Hybrid 634c	Hekla
Lumileds	CX Plus HD S04H9	**47864**	COB Holder Hybrid 634b	Hekla
Lumileds	CX Plus S01Fx / S02Fx	**47868**	COB Holder Hybrid 634c	Hekla
Lumileds	CX Plus M02Fx / M03Fx	**47510**	COB Holder Hybrid 641a	Hekla
Lumileds	CX Plus L04Fx / L05Fx / L08Fx	**47509**	COB Holder Hybrid 637a	Hekla
Luminus	CXM-3-xC	**47505**	COB Holder Hybrid 634a	Hekla
Luminus	CHM-4-BH / CXM-4-xC	**47505**	COB Holder Hybrid 634a	Hekla
Luminus	CHM-6-BH / CXM-6-xC	**47505**	COB Holder Hybrid 634a	Hekla
Luminus	CIM/CLM/CXM-9-xC	**47505**	COB Holder Hybrid 634a	Hekla
Luminus	CHM-9-BH	**47495**	COB Holder Hybrid 633a	Hekla
Luminus	CXM-11-xC	**47495**	COB Holder Hybrid 633a	Hekla
Luminus	CGM/CIM/CLM/CXM-14-xC	**47495**	COB Holder Hybrid 633a	Hekla
Luminus	CXM-18 Gen6	**48219**	COB Holder Hybrid 631a	Hekla XL
Luminus	CGM/CIM/CLM/CXM-22-xC	**48219**	COB Holder Hybrid 631a	Hekla XL
Luminus	CDM-6 / CDM-9Gen1 DtW	**47892**	COB Holder Hybrid 652b	Hekla
Luminus	CDM-9 Gen2 DtW	**48184**	COB Holder Hybrid 632b	Hekla XL
Luminus	CDM-14/CDM-18 DtW	**48184**	COB Holder Hybrid 632b	Hekla XL
Luxtech	COB-WD-10-1512	**47889**	COB Holder Hybrid 652a	Hekla
Luxtech	COB-WD-17-2420	**48217**	COB Holder Hybrid 632a	Hekla XL
Nichia	NV..S007Z / NF..T012B	**47889**	COB Holder Hybrid 652a	Hekla
Nichia	NF..S024B / NT..S024B	**47889**	COB Holder Hybrid 652a	Hekla
Nichia	NJ..S024Z	**47889**	COB Holder Hybrid 652a	Hekla

Nichia	NV..L016Z / NV..L024Z	**47875**	COB Holder Hybrid 638a	Hekla
Nichia	NF..L036B / NF..L048B	**47875**	COB Holder Hybrid 638a	Hekla
Nichia	NF..L060B	**47875**	COB Holder Hybrid 638a	Hekla
Nichia	NV..J048Z / NF..J108B	**48366**	COB Holder Hybrid 663a	Hekla XL
Nichia	NF..J130B	**48366**	COB Holder Hybrid 663a	Hekla XL
Philips	Fortimo SLM12xx .. 1215 G7	**47889**	COB Holder Hybrid 652a	Hekla
Philips	Fortimo SLM12xx .. 1619 G7	**47878**	COB Holder Hybrid 638b	Hekla
Philips	Fortimo SLM12xx .. 2024 G7	**48217**	COB Holder Hybrid 632a	Hekla XL
Philips	Fortimo SLM12xx .. 2828 G7	**48220**	COB Holder Hybrid 631b	Hekla XL
Philips	Fortimo SLM12xx .. 1313 G7N	**47505**	COB Holder Hybrid 634a	Hekla
Philips	Fortimo SLM12xx .. 1919 G7N	**47495**	COB Holder Hybrid 633a	Hekla
Philips	Fortimo SLM12xx .. 2828 G7N	**48220**	COB Holder Hybrid 631b	Hekla XL
Philips	Fortimo SLM13xx .. 2024 G8 UHE	**48217**	COB Holder Hybrid 632a	Hekla XL
Philips	Fortimo SLM13xx .. 2828 G8 UHE	**48220**	COB Holder Hybrid 631b	Hekla XL
Prolight Opto	PASB	**47505**	COB Holder Hybrid 634a	Hekla
Prolight Opto	PASQ/PAPQ DimToWarm	**47505**	COB Holder Hybrid 634a	Hekla
Prolight Opto	PDSQ DimToWarm	**47892**	COB Holder Hybrid 652b	Hekla
Prolight Opto	PDSR DimToWarm	**48184**	COB Holder Hybrid 632b	Hekla XL
Samsung	LC 010C	**47505**	COB Holder Hybrid 634a	Hekla
Samsung	LC 020C / 030C / 040C	**47560**	COB Holder Hybrid 633c	Hekla
Samsung	LC 003D / 006D	**47505**	COB Holder Hybrid 634a	Hekla
Samsung	LC 009D / 013D	**47505**	COB Holder Hybrid 634a	Hekla
Samsung	LC 016D / 019D	**47560**	COB Holder Hybrid 633c	Hekla
Samsung	LC 026D / 033D	**47560**	COB Holder Hybrid 633c	Hekla
Samsung	LC 040D / 060D / 080D	**48220**	COB Holder Hybrid 631b	Hekla XL
Seoul	SAW* 0661	**47864**	COB Holder Hybrid 634b	Hekla
Seoul	SAW* 1062 / 1063	**47864**	COB Holder Hybrid 634b	Hekla
Seoul	SAW* 1564 / 1565 / 1566	**47560**	COB Holder Hybrid 633c	Hekla
Seoul	SAW* 22AA / 2296	**48219**	COB Holder Hybrid 631a	Hekla XL
Seoul	SAW* 2298 / 226A	**48219**	COB Holder Hybrid 631a	Hekla XL
Tridonic	SLE ADV8 LES 04 / 06	**47505**	COB Holder Hybrid 634a	Hekla
Tridonic	SLE ADV8 LES 09	**47505**	COB Holder Hybrid 634a	Hekla
Tridonic	SLE ADV8 LES 13	**47560**	COB Holder Hybrid 633c	Hekla
Tridonic	SLE ADV8 LES 15	**47560**	COB Holder Hybrid 633c	Hekla
Tridonic	SLE ADV8 LES 17	**48220**	COB Holder Hybrid 631b	Hekla XL
Tridonic	SLE ADV8 LES 21	**48220**	COB Holder Hybrid 631b	Hekla XL
Tridonic	SLE SNC8 LES 06	**47505**	COB Holder Hybrid 634a	Hekla
Tridonic	SLE SNC8 LES 09	**47505**	COB Holder Hybrid 634a	Hekla
Tridonic	SLE SNC8 LES 15	**47560**	COB Holder Hybrid 633c	Hekla
VS Lighting	DMS 102 ***W	**47505**	COB Holder Hybrid 634a	Hekla
VS Lighting	DMS 124 ***W	**47505**	COB Holder Hybrid 634a	Hekla
VS Lighting	DMS 125 / 126 / 128 ***W	**47495**	COB Holder Hybrid 633a	Hekla
VS Lighting	DMS 120 ***W	**48219**	COB Holder Hybrid 631a	Hekla XL

VS Lighting	DMS 12C / 18B ***W	**48219**	COB Holder Hybrid 631a	Hekla XL
VS Lighting	DMS 1208J	**47495**	COB Holder Hybrid 633a	Hekla
VS Lighting	DMS 1212J / 1812J	**48219**	COB Holder Hybrid 631a	Hekla XL
VS Lighting	VCA 042	**47864**	COB Holder Hybrid 634b	Hekla
VS Lighting	VCA2 122 / 123 / 124	**47864**	COB Holder Hybrid 634b	Hekla
VS Lighting	VCA2 126 / 128	**47560**	COB Holder Hybrid 633c	Hekla
VS Lighting	VCA2 1211 / 1213	**48220**	COB Holder Hybrid 631b	Hekla XL
VS Lighting	WU-M-618 DimToWarm	**47505**	COB Holder Hybrid 634a	Hekla
Xicato	XOB 04	**47864**	COB Holder Hybrid 634b	Hekla
Xicato	XOB 06 (B)	**47864**	COB Holder Hybrid 634b	Hekla
Xicato	XOB 09	**47505**	COB Holder Hybrid 634a	Hekla
Xicato	XOB 14	**47495**	COB Holder Hybrid 633a	Hekla
Xicato	XOB 23	**48219**	COB Holder Hybrid 631a	Hekla XL

COB HALTER HYBRID
COB HOLDER HYBRID

630

BENDER +WIRTH

Gehäusetyp: Housing:	**Hekla**	**Größe / Size : 44/50 mm** **Höhe / Height : 5,5 mm**
Beispiele für passende Optiken examples of suitable optics	**LEDiL BARBARA-G2, MIRELLA-G2, BROOKE-G2, CARMEN 50/70, ZORYA-C** **LEDiL ADELIA 50/70/110, ILONA/ILONA ZOOM, RONDA-C, WINNIE-C** **LEDiL AMY/AMY ZOOM (-C) 50/70, YASMEEN/YASMEEN ZOOM (-C) 50/70**	

COB HALTER HYBRID
COB HOLDER HYBRID

630

BENDER +WIRTH

Gehäusetyp: Housing:	**Bayonet35**	**Größe / Size : 32mm** **Höhe / Height : 5,3 / 3,6 mm**
Beispiele für passende Optiken examples of suitable optics	**LEDiL AMY/ AMY ZOOM (-B) 35/50/70** **LEDiL YASMEEN / YASMEEN ZOOM (-B) 35/50/70**	

Version 1 Bayonet35/20 : 634x, 652x, 660x, 667x

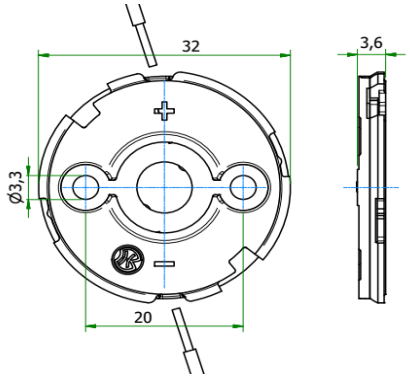

Spezielle Schraube mit flachem Kopf erforderlich
Special flat head screw required

e.g. 48279
M3 x 8mm

Bemessungsspannung rated voltage	**Standard 250V DC** **optional 450V DC**
Bemessungsstrom rated current	**5 A**
Bemessungstemperatur rated operating temperature	**T 120**
Befestigung fixing	**2 Schrauben M3** 2 screws M3
max. Drehmonent max. torque	**0,3 Nm**
Material des Halters material of the holder	**PBT / Mikanit** PBT / Mica
Kontaktmaterial contactmaterial	**CuSn** CuSn

Zulässige COB Abmessungen
Permissible COB dimensions

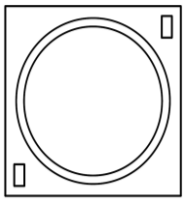

siehe Einzeldatenblätter im Online Katalog

see data sheets at our web catalogue

Zertifikate / certificates

Ausweis-Nr.

File E4729

Weitere technische Daten und Montagehinweise sind im Technical Guide COB Halterserie 630 enthalten.
Further technical details and mounting instructions are part of the Technical Guide COB holder series 630.

COB HALTER HYBRID
COB HOLDER HYBRID

630

BENDER +WIRTH

Teilumhüllter Halter für folgende COBs / unenclosed holder for the following COBs:				
Hersteller supplier	**COB Typ** COB Type	**Teile-Nr.** part no.	**Haltervariante** variant of holder	
Bridgelux	V3 HD / V4 HD Gen 7,8	**49692**	COB Holder Hybrid 660a	Bayonet35/20
Bridgelux	V6 HD Gen 7,8	**49046**	COB Holder Hybrid 634c	Bayonet35/20
Bridgelux	V6 Gen 8,9 (just 2 pads!)	**49692**	COB Holder Hybrid 660a	Bayonet35/20
Bridgelux	V8 Gen 7,8,9 (4 pads)	**49692**	COB Holder Hybrid 660a	Bayonet35/20
Bridgelux	V10 Gen 7,8,9	**49047**	COB Holder Hybrid 634b	Bayonet35/20
Bridgelux	Vesta DTW 6/9mm Gen 1,2	**49040**	COB Holder Hybrid 652b	Bayonet35/20
Citizen	CLU 028 / 02J / 02Q	**49039**	COB Holder Hybrid 634a	Bayonet35/20
Citizen	CLU 7L3 / 7S3	**49355**	COB Holder Hybrid 667a	Bayonet35/20
Citizen	CLU 702 / 703 / 7A2 /7A3 / 7B2	**49039**	COB Holder Hybrid 634a	Bayonet35/20
CREE	CHA 0304 / 0410 / 0612	**49039**	COB Holder Hybrid 634a	Bayonet35/20
CREE	CMA 1303 / 1306	**49046**	COB Holder Hybrid 634c	Bayonet35/20
CREE	CMB 1304 / 1306	**49046**	COB Holder Hybrid 634c	Bayonet35/20
CREE	CMT 1407 / 1412 / 1420	**49039**	COB Holder Hybrid 634a	Bayonet35/20
CREE	CMU 1003 / 1006 / 1010 / 1013	**49039**	COB Holder Hybrid 634a	Bayonet35/20
CREE	CXB 1304 / 1310	**49046**	COB Holder Hybrid 634c	Bayonet35/20
Edison	2PHE 03 / 06 / 09 / 13	**49039**	COB Holder Hybrid 634a	Bayonet35/20
Lextar	PB 06 / 09 / 13	**49039**	COB Holder Hybrid 634a	Bayonet35/20
Lumileds	Luxeon 1202s / 1202HD	**49049**	COB Holder Hybrid 652a	Bayonet35/20
Lumileds	CS COB L02 / L04	**49039**	COB Holder Hybrid 634a	Bayonet35/20
Lumileds	CX Plus HD S01H4, S0xH6	**49046**	COB Holder Hybrid 634c	Bayonet35/20
Lumileds	CX Plus HD S04H9	**49047**	COB Holder Hybrid 634b	Bayonet35/20
Lumileds	CX Plus S01Fx / S02Fx	**49046**	COB Holder Hybrid 634c	Bayonet35/20
Luminus	CXM-3-xC	**49039**	COB Holder Hybrid 634a	Bayonet35/20
Luminus	CHM-4-BH / CXM-4-xC	**49039**	COB Holder Hybrid 634a	Bayonet35/20
Luminus	CHM-6-BH / CXM-6-xC	**49039**	COB Holder Hybrid 634a	Bayonet35/20
Luminus	CIM/CLM/CXM-9-xC	**49039**	COB Holder Hybrid 634a	Bayonet35/20
Luminus	CDM-6 / CDM-9Gen1 DtW	**49040**	COB Holder Hybrid 652b	Bayonet35/20
Luxtech	COB-WD-10-1512	**49049**	COB Holder Hybrid 652a	Bayonet35/20
Nichia	NV..S007Z / NF..T012B	**49049**	COB Holder Hybrid 652a	Bayonet35/20
Nichia	NF..S024B / NT..S024B	**49049**	COB Holder Hybrid 652a	Bayonet35/20
Nichia	NJ..S024Z	**49049**	COB Holder Hybrid 652a	Bayonet35/20
Philips	Fortimo SLM12xx .. 1215 G7	**49049**	COB Holder Hybrid 652a	Bayonet35/20
Philips	Fortimo SLM12xx .. 1313 G7N	**49039**	COB Holder Hybrid 634a	Bayonet35/20
Prolight Opto	PASB	**49039**	COB Holder Hybrid 634a	Bayonet35/20
Prolight Opto	PASQ/PAPQ DimToWarm	**49039**	COB Holder Hybrid 634a	Bayonet35/20
Prolight Opto	PDSQ DimToWarm	**49040**	COB Holder Hybrid 652b	Bayonet35/20
Samsung	LC 010C	**49039**	COB Holder Hybrid 634a	Bayonet35/20
Samsung	LC 003D / 006D	**49039**	COB Holder Hybrid 634a	Bayonet35/20
Samsung	LC 009D / 013D	**49039**	COB Holder Hybrid 634a	Bayonet35/20
Seoul	SAW* 0661	**49047**	COB Holder Hybrid 634b	Bayonet35/20

Seoul	SAW* 1062 / 1063	**49047**	COB Holder Hybrid 634b	Bayonet35/20
Tridonic	SLE ADV8 LES 04 / 06	**49039**	COB Holder Hybrid 634a	Bayonet35/20
Tridonic	SLE ADV8 LES 09	**49039**	COB Holder Hybrid 634a	Bayonet35/20
Tridonic	SLE SNC8 LES 06	**49039**	COB Holder Hybrid 634a	Bayonet35/20
Tridonic	SLE SNC8 LES 09	**49039**	COB Holder Hybrid 634a	Bayonet35/20
VS Lighting	DMS 102 ***W	**49039**	COB Holder Hybrid 634a	Bayonet35/20
VS Lighting	DMS 124 ***W	**49039**	COB Holder Hybrid 634a	Bayonet35/20
VS Lighting	VCA 042	**49047**	COB Holder Hybrid 634b	Bayonet35/20
VS Lighting	VCA2 122 / 123 / 124	**49047**	COB Holder Hybrid 634b	Bayonet35/20
VS Lighting	WU-M-618 DimToWarm	**49039**	COB Holder Hybrid 634a	Bayonet35/20
Xicato	XOB 04	**49047**	COB Holder Hybrid 634b	Bayonet35/20
Xicato	XOB 06 (B)	**49047**	COB Holder Hybrid 634b	Bayonet35/20
Xicato	XOB 09	**49039**	COB Holder Hybrid 634a	Bayonet35/20

COB HALTER HYBRID
COB HOLDER HYBRID

630

BENDER +WIRTH

Gehäusetyp: Housing:	**3Hook**	**Größe / Size : 50 mm** **Höhe / Height : 5,9 mm**
Beispiele für passende Optiken examples of suitable optics	**LEDiL ANGELA, ANGELINA, ANGELETTE** **LEDiL MOLLY, RONDA (HOLDER A)**	

Version 1: 633x, 634x, 637x, 638x, 641x, 652x, 660x

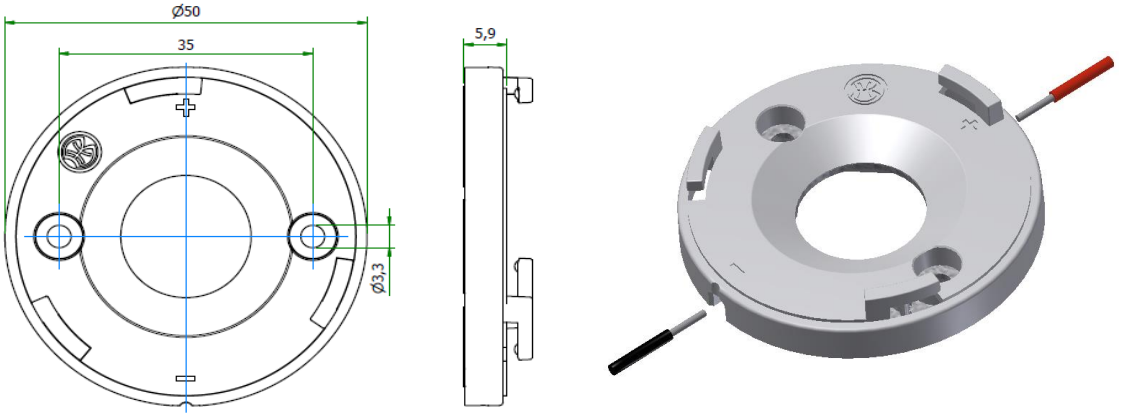

Version 2: 631x, 632x, 639x, 663x

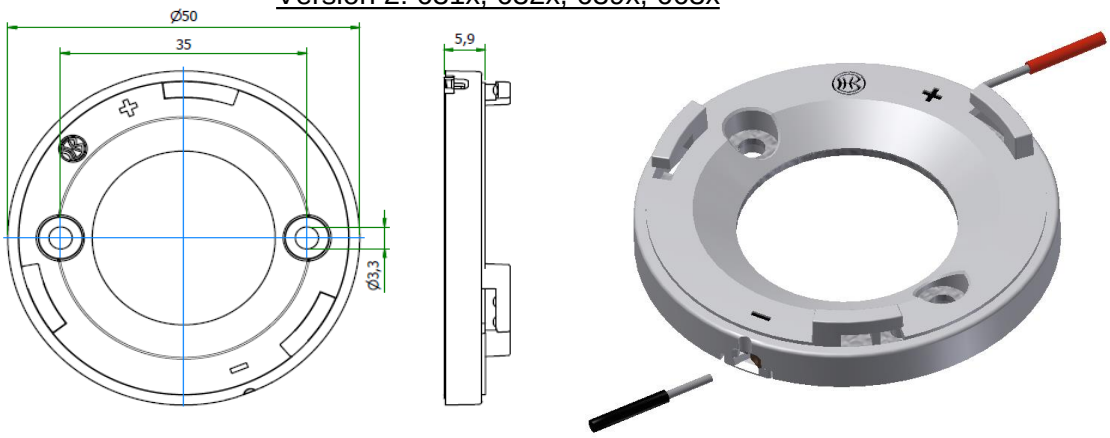

Bemessungsspannung rated voltage	**Standard 250V DC** **optional 450V DC**	**Zulässige COB Abmessungen** Permissible COB dimensions
Bemessungsstrom rated current	**5 A**	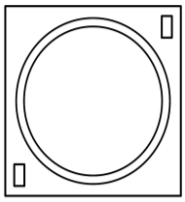 **siehe Einzeldatenblätter im Online Katalog** see data sheets at our web catalogue
Bemessungstemperatur rated operating temperature	**T 120**	
Befestigung fixing	**2 Schrauben M3** 2 screws M3	
max. Drehmonent max. torque	**0,5 Nm**	
Material des Halters material of the holder	**PBT / Mikanit** PBT / Mica	**Zertifikate / certificates**
Kontaktmaterial contactmaterial	**CuSn** CuSn	**Ausweis-Nr.** **File E4729**

Weitere technische Daten und Montagehinweise sind im Technical Guide COB Halterserie 630 enthalten.
Further technical details and mounting instructions are part of the Technical Guide COB holder series 630.

Teilumhüllter Halter für folgende COBs / unenclosed holder for the following COBs:			
Hersteller supplier	**COB Typ** COB Type	**Teile-Nr.** part no.	**Haltervariante** variant of holder
Bridgelux	V3 HD / V4 HD Gen 7,8	**47957**	COB Holder Hybrid 660a 3Hook
Bridgelux	V6 HD Gen 7,8	**47867**	COB Holder Hybrid 634c 3Hook
Bridgelux	V9 HD / V11 HD Gen 7,8	**47565**	COB Holder Hybrid 633d 3Hook
Bridgelux	V6 Gen 8,9 (just 2 pads!)	**47957**	COB Holder Hybrid 660a 3Hook
Bridgelux	V8 Gen 7,8,9 (4 pads)	**47957**	COB Holder Hybrid 660a 3Hook
Bridgelux	V10 Gen 7,8,9	**47863**	COB Holder Hybrid 634b 3Hook
Bridgelux	V13 Gen 7,8,9	**47564**	COB Holder Hybrid 633c 3Hook
Bridgelux	V18 Gen 7,8,9	**47882**	COB Holder Hybrid 639b 3Hook
Bridgelux	V22 Gen 7,8,9	**47583**	COB Holder Hybrid 631b 3Hook
Bridgelux	Vesta DTW 6/9mm Gen 1,2	**47891**	COB Holder Hybrid 652b 3Hook
Bridgelux	Vesta DTW 13/15mm Gen 1,2	**47858**	COB Holder Hybrid 632b 3Hook
Bridgelux	Vesta DTW 18mm Gen 1	**on request**	COB Holder Hybrid 639c 3Hook
Bridgelux	Vesta Tunable 9mm Gen 2	**on request**	Werkzeug fehlt / Tooling required
Bridgelux	Vesta Tunable 13mm Gen 2	**on request**	Werkzeug fehlt / Tooling required
Citizen	CLU 028 / 02J / 02Q	**47441**	COB Holder Hybrid 634a 3Hook
Citizen	CLU 038 / 03H / 03J / 03Q	**47562**	COB Holder Hybrid 633a 3Hook
Citizen	CLU 048 / 04H / 04J / 04Q	**47582**	COB Holder Hybrid 631a 3Hook
Citizen	CLU 7L3 / 7S3	**on request**	Werkzeug fehlt / Tooling required
Citizen	CLU 702 / 703 / 7A2 /7A3 / 7B2	**47441**	COB Holder Hybrid 634a 3Hook
Citizen	CLU 712 / 713	**47564**	COB Holder Hybrid 633c 3Hook
Citizen	CLU 723	**47564**	COB Holder Hybrid 633c 3Hook
Citizen	CLU 733	**47583**	COB Holder Hybrid 631b 3Hook
CREE	CHA 0304 / 0410 / 0612	**47441**	COB Holder Hybrid 634a 3Hook
CREE	CHA 0825	**47562**	COB Holder Hybrid 633a 3Hook
CREE	CMA 1303 / 1306	**47867**	COB Holder Hybrid 634c 3Hook
CREE	CMA 1516	**47460**	COB Holder Hybrid 641a 3Hook
CREE	CMA 1825 / 1840	**47472**	COB Holder Hybrid 637a 3Hook
CREE	CMA 2550	**47585**	COB Holder Hybrid 639a 3Hook
CREE	CMB 1304 / 1306	**47867**	COB Holder Hybrid 634c 3Hook
CREE	CMB 1507 / 1510 / 1516	**47460**	COB Holder Hybrid 641a 3Hook
CREE	CMB 1818 / 1825	**47472**	COB Holder Hybrid 637a 3Hook
CREE	CMB 1840	**47871**	COB Holder Hybrid 637b 3Hook
CREE	CMB 2550	**47585**	COB Holder Hybrid 639a 3Hook
CREE	CMT 1407 / 1412 / 1420	**47441**	COB Holder Hybrid 634a 3Hook
CREE	CMT 1922 / 1925 / 1930 / 1945	**47564**	COB Holder Hybrid 633c 3Hook
CREE	CMT 2850 / 2870 / 2890	**47583**	COB Holder Hybrid 631b 3Hook
CREE	CMU 1003 / 1006 / 1010 / 1013	**47441**	COB Holder Hybrid 634a 3Hook
CREE	CMU 1516 / 1519 / 1526 / 1532	**47562**	COB Holder Hybrid 633a 3Hook
CREE	CMU 2236 / 2239 / 2258 / 2287	**47583**	COB Holder Hybrid 631b 3Hook
CREE	CXB 1304 / 1310	**47867**	COB Holder Hybrid 634c 3Hook

CREE	CXB 1507 / 1512 / 1520	**47460**	COB Holder Hybrid 641a 3Hook
CREE	CXB 1816 / 1820	**47472**	COB Holder Hybrid 637a 3Hook
CREE	CXB 1830	**47871**	COB Holder Hybrid 637b 3Hook
CREE	CXB 2530 / 2540	**47585**	COB Holder Hybrid 639a 3Hook
Edison	2PHE 03 / 06 / 09 / 13	**47441**	COB Holder Hybrid 634a 3Hook
Edison	2PHE 15 / 18 / 24 / 30	**47562**	COB Holder Hybrid 633a 3Hook
Edison	2PHE 55 / 60 / 83	**47582**	COB Holder Hybrid 631a 3Hook
Lextar	PB 06 / 09 / 13	**47441**	COB Holder Hybrid 634a 3Hook
Lextar	PB 16 / 19 / 26	**47562**	COB Holder Hybrid 633a 3Hook
Lextar	PB 38 / 54	**47582**	COB Holder Hybrid 631a 3Hook
Lumileds	Luxeon 1202s / 1202HD	**47456**	COB Holder Hybrid 652a 3Hook
Lumileds	Luxeon 1202 / 1203 / 1204HD	**47877**	COB Holder Hybrid 638b 3Hook
Lumileds	Luxeon 1205HD	**47877**	COB Holder Hybrid 638b 3Hook
Lumileds	Luxeon 1204 / 1205	**47580**	COB Holder Hybrid 632a 3Hook
Lumileds	Luxeon 1208 / 1210	**47580**	COB Holder Hybrid 632a 3Hook
Lumileds	Luxeon 1211	**47583**	COB Holder Hybrid 631b 3Hook
Lumileds	Luxeon 1213 / 1216 / 1812 / 1816	**47583**	COB Holder Hybrid 631b 3Hook
Lumileds	CS COB L02 / L04	**47441**	COB Holder Hybrid 634a 3Hook
Lumileds	CS COB L06 / L08 / L10	**47562**	COB Holder Hybrid 633a 3Hook
Lumileds	CS COB L11 / L13 / L16	**47582**	COB Holder Hybrid 631a 3Hook
Lumileds	CS COB R12 / R18	**47582**	COB Holder Hybrid 631a 3Hook
Lumileds	CX Plus HD S01H4, S0xH6	**47867**	COB Holder Hybrid 634c 3Hook
Lumileds	CX Plus HD S04H9	**47863**	COB Holder Hybrid 634b 3Hook
Lumileds	CX Plus S01Fx / S02Fx	**47867**	COB Holder Hybrid 634c 3Hook
Lumileds	CX Plus M02Fx / M03Fx	**47460**	COB Holder Hybrid 641a 3Hook
Lumileds	CX Plus L04Fx / L05Fx / L08Fx	**47472**	COB Holder Hybrid 637a 3Hook
Luminus	CXM-3-xC	**47441**	COB Holder Hybrid 634a 3Hook
Luminus	CHM-4-BH / CXM-4-xC	**47441**	COB Holder Hybrid 634a 3Hook
Luminus	CHM-6-BH / CXM-6-xC	**47441**	COB Holder Hybrid 634a 3Hook
Luminus	CIM/CLM/CXM-9-xC	**47441**	COB Holder Hybrid 634a 3Hook
Luminus	CHM-9-BH	**47562**	COB Holder Hybrid 633a 3Hook
Luminus	CXM-11-xC	**47562**	COB Holder Hybrid 633a 3Hook
Luminus	CGM/CIM/CLM/CXM-14-xC	**47562**	COB Holder Hybrid 633a 3Hook
Luminus	CXM-18 Gen6	**47582**	COB Holder Hybrid 631a 3Hook
Luminus	CGM/CIM/CLM/CXM-22-xC	**47582**	COB Holder Hybrid 631a 3Hook
Luminus	CDM-6 / CDM-9Gen1 DtW	**47891**	COB Holder Hybrid 652b 3Hook
Luminus	CDM-9 Gen2 DtW	**47858**	COB Holder Hybrid 632b 3Hook
Luminus	CDM-14/CDM-18 DtW	**47858**	COB Holder Hybrid 632b 3Hook
Luxtech	COB-WD-10-1512	**47456**	COB Holder Hybrid 652a 3Hook
Luxtech	COB-WD-17-2420	**47580**	COB Holder Hybrid 632a 3Hook
Nichia	NV..S007Z / NF..T012B	**47456**	COB Holder Hybrid 652a 3Hook
Nichia	NF..S024B / NT..S024B	**47456**	COB Holder Hybrid 652a 3Hook
Nichia	NJ..S024Z	**47456**	COB Holder Hybrid 652a 3Hook

Nichia	NV..L016Z / NV..L024Z	**47466**	COB Holder Hybrid 638a 3Hook
Nichia	NF..L036B / NF..L048B	**47466**	COB Holder Hybrid 638a 3Hook
Nichia	NF..L060B	**47466**	COB Holder Hybrid 638a 3Hook
Nichia	NV..J048Z / NF..J108B	**47947**	COB Holder Hybrid 663a 3Hook
Nichia	NF..J130B	**47947**	COB Holder Hybrid 663a 3Hook
Philips	Fortimo SLM12xx .. 1215 G7	**47456**	COB Holder Hybrid 652a 3Hook
Philips	Fortimo SLM12xx .. 1619 G7	**47877**	COB Holder Hybrid 638b 3Hook
Philips	Fortimo SLM12xx .. 2024 G7	**47580**	COB Holder Hybrid 632a 3Hook
Philips	Fortimo SLM12xx .. 2828 G7	**47583**	COB Holder Hybrid 631b 3Hook
Philips	Fortimo SLM12xx .. 1313 G7N	**47441**	COB Holder Hybrid 634a 3Hook
Philips	Fortimo SLM12xx .. 1919 G7N	**47562**	COB Holder Hybrid 633a 3Hook
Philips	Fortimo SLM12xx .. 2828 G7N	**47583**	COB Holder Hybrid 631b 3Hook
Philips	Fortimo SLM13xx .. 2024 G8 UHE	**47580**	COB Holder Hybrid 632a 3Hook
Philips	Fortimo SLM13xx .. 2828 G8 UHE	**47583**	COB Holder Hybrid 631b 3Hook
Prolight Opto	PASB	**47441**	COB Holder Hybrid 634a 3Hook
Prolight Opto	PASQ/PAPQ DimToWarm	**47441**	COB Holder Hybrid 634a 3Hook
Prolight Opto	PDSQ DimToWarm	**47891**	COB Holder Hybrid 652b 3Hook
Prolight Opto	PDSR DimToWarm	**47858**	COB Holder Hybrid 632b 3Hook
Samsung	LC 010C	**47441**	COB Holder Hybrid 634a 3Hook
Samsung	LC 020C / 030C / 040C	**47564**	COB Holder Hybrid 633c 3Hook
Samsung	LC 003D / 006D	**47441**	COB Holder Hybrid 634a 3Hook
Samsung	LC 009D / 013D	**47441**	COB Holder Hybrid 634a 3Hook
Samsung	LC 016D / 019D	**47564**	COB Holder Hybrid 633c 3Hook
Samsung	LC 026D / 033D	**47564**	COB Holder Hybrid 633c 3Hook
Samsung	LC 040D / 060D / 080D	**47583**	COB Holder Hybrid 631b 3Hook
Seoul	SAW* 0661	**47863**	COB Holder Hybrid 634b 3Hook
Seoul	SAW* 1062 / 1063	**47863**	COB Holder Hybrid 634b 3Hook
Seoul	SAW* 1564 / 1565 / 1566	**47564**	COB Holder Hybrid 633c 3Hook
Seoul	SAW* 22AA / 2296	**47582**	COB Holder Hybrid 631a 3Hook
Seoul	SAW* 2298 / 226A	**47582**	COB Holder Hybrid 631a 3Hook
Tridonic	SLE ADV8 LES 04 / 06	**47441**	COB Holder Hybrid 634a 3Hook
Tridonic	SLE ADV8 LES 09	**47441**	COB Holder Hybrid 634a 3Hook
Tridonic	SLE ADV8 LES 13	**47564**	COB Holder Hybrid 633c 3Hook
Tridonic	SLE ADV8 LES 15	**47564**	COB Holder Hybrid 633c 3Hook
Tridonic	SLE ADV8 LES 17	**47583**	COB Holder Hybrid 631b 3Hook
Tridonic	SLE ADV8 LES 21	**47583**	COB Holder Hybrid 631b 3Hook
Tridonic	SLE SNC8 LES 06	**47441**	COB Holder Hybrid 634a 3Hook
Tridonic	SLE SNC8 LES 09	**47441**	COB Holder Hybrid 634a 3Hook
Tridonic	SLE SNC8 LES 15	**47564**	COB Holder Hybrid 633c 3Hook
VS Lighting	DMS 102 ***W	**47441**	COB Holder Hybrid 634a 3Hook
VS Lighting	DMS 124 ***W	**47441**	COB Holder Hybrid 634a 3Hook
VS Lighting	DMS 125 / 126 / 128 ***W	**47562**	COB Holder Hybrid 633a 3Hook
VS Lighting	DMS 120 ***W	**47582**	COB Holder Hybrid 631a 3Hook

VS Lighting	DMS 12C / 18B ***W	**47582**	COB Holder Hybrid 631a 3Hook
VS Lighting	DMS 1208J	**47562**	COB Holder Hybrid 633a 3Hook
VS Lighting	DMS 1212J / 1812J	**47582**	COB Holder Hybrid 631a 3Hook
VS Lighting	VCA 042	**47863**	COB Holder Hybrid 634b 3Hook
VS Lighting	VCA2 122 / 123 / 124	**47863**	COB Holder Hybrid 634b 3Hook
VS Lighting	VCA2 126 / 128	**47564**	COB Holder Hybrid 633c 3Hook
VS Lighting	VCA2 1211 / 1213	**47583**	COB Holder Hybrid 631b 3Hook
VS Lighting	WU-M-618 DimToWarm	**47441**	COB Holder Hybrid 634a 3Hook
Xicato	XOB 04	**47863**	COB Holder Hybrid 634b 3Hook
Xicato	XOB 06 (B)	**47863**	COB Holder Hybrid 634b 3Hook
Xicato	XOB 09	**47441**	COB Holder Hybrid 634a 3Hook
Xicato	XOB 14	**47562**	COB Holder Hybrid 633a 3Hook
Xicato	XOB 23	**47582**	COB Holder Hybrid 631a 3Hook

COB HALTER HYBRID
COB HOLDER HYBRID

630

BENDER +WIRTH

Gehäusetyp: Housing:	**Lena**	**Größe / Size : 50 mm** **Höhe / Height : 7,7 mm**
Beispiele für passende Optiken examples of suitable optics	**LEDiL LENA, LENINA**	

Version 1: 633x, 634x, 637x, 638x, 641x, 652x, 660x

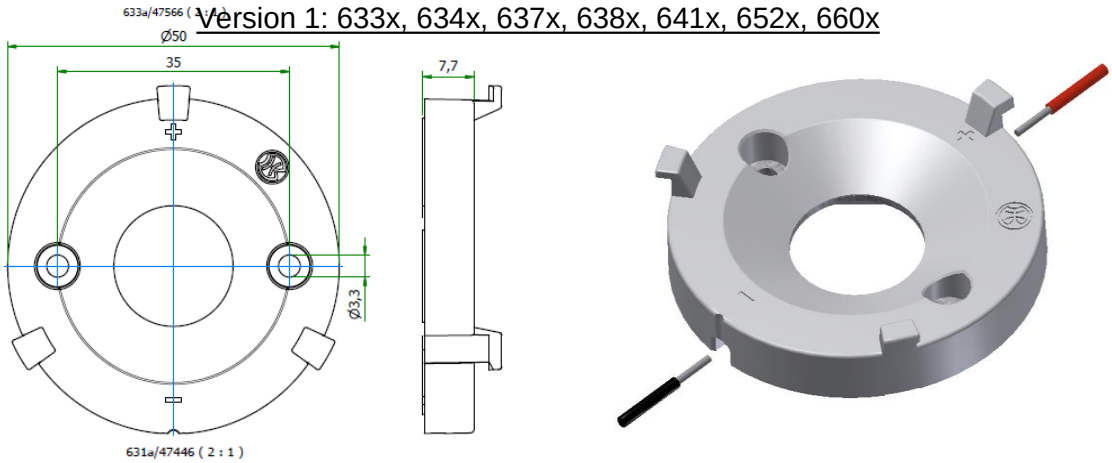

Version 2: 631x, 632x, 639x, 663x

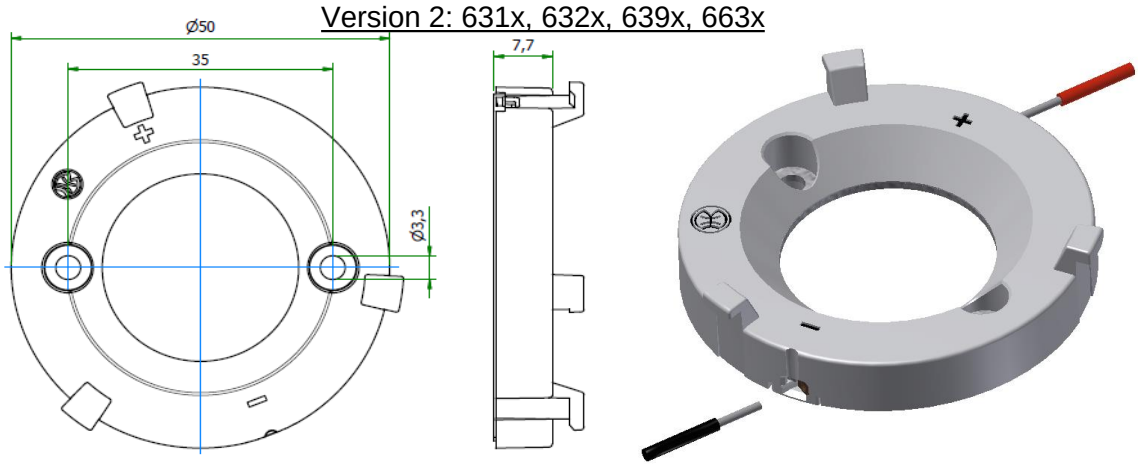

Bemessungsspannung rated voltage	**Standard 250V DC** **optional 450V DC**	**Zulässige COB Abmessungen** Permissible COB dimensions
Bemessungsstrom rated current	**5 A**	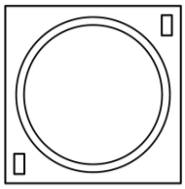 **siehe Einzeldatenblätter im Online Katalog** see data sheets at our web catalogue
Bemessungstemperatur rated operating temperature	**T 120**	
Befestigung fixing	**2 Schrauben M3** 2 screws M3	
max. Drehmonent max. torque	**0,5 Nm**	
Material des Halters material of the holder	**PBT / Mikanit** PBT / Mica	**Zertifikate / certificates**
Kontaktmaterial contactmaterial	**CuSn** CuSn	**Ausweis-Nr.** **File E4729**

Weitere technische Daten und Montagehinweise sind im Technical Guide COB Halterserie 630 enthalten.
Further technical details and mounting instructions are part of the Technical Guide COB holder series 630.

Teilumhüllter Halter für folgende COBs / unenclosed holder for the following COBs:			
Hersteller supplier	**COB Typ** COB Type	**Teile-Nr.** part no.	**Haltervariante** variant of holder
Bridgelux	V3 HD / V4 HD Gen 7,8	**47956**	COB Holder Hybrid 660a Lena
Bridgelux	V6 HD Gen 7,8	**47869**	COB Holder Hybrid 634c Lena
Bridgelux	V9 HD / V11 HD Gen 7,8	**47577**	COB Holder Hybrid 633d Lena
Bridgelux	V6 Gen 8,9 (just 2 pads!)	**47956**	COB Holder Hybrid 660a Lena
Bridgelux	V8 Gen 7,8,9 (4 pads)	**47956**	COB Holder Hybrid 660a Lena
Bridgelux	V10 Gen 7,8,9	**47865**	COB Holder Hybrid 634b Lena
Bridgelux	V13 Gen 7,8,9	**47576**	COB Holder Hybrid 633c Lena
Bridgelux	V18 Gen 7,8,9	**47883**	COB Holder Hybrid 639b Lena
Bridgelux	V22 Gen 7,8,9	**47855**	COB Holder Hybrid 631b Lena
Bridgelux	Vesta DTW 6/9mm Gen 1,2	**47893**	COB Holder Hybrid 652b Lena
Bridgelux	Vesta DTW 13/15mm Gen 1,2	**47859**	COB Holder Hybrid 632b Lena
Bridgelux	Vesta DTW 18mm Gen 1	**on request**	COB Holder Hybrid 639c Lena
Bridgelux	Vesta Tunable 9mm Gen 2	**on request**	Werkzeug fehlt / Tooling required
Bridgelux	Vesta Tunable 13mm Gen 2	**on request**	Werkzeug fehlt / Tooling required
Citizen	CLU 028 / 02J / 02Q	**47444**	COB Holder Hybrid 634a Lena
Citizen	CLU 038 / 03H / 03J / 03Q	**47566**	COB Holder Hybrid 633a Lena
Citizen	CLU 048 / 04H / 04J / 04Q	**47446**	COB Holder Hybrid 631a Lena
Citizen	CLU 7L3 / 7S3	**on request**	Werkzeug fehlt / Tooling required
Citizen	CLU 702 / 703 / 7A2 /7A3 / 7B2	**47444**	COB Holder Hybrid 634a Lena
Citizen	CLU 712 / 713	**47576**	COB Holder Hybrid 633c Lena
Citizen	CLU 723	**47576**	COB Holder Hybrid 633c Lena
Citizen	CLU 733	**47855**	COB Holder Hybrid 631b Lena
CREE	CHA 0304 / 0410 / 0612	**47444**	COB Holder Hybrid 634a Lena
CREE	CHA 0825	**47566**	COB Holder Hybrid 633a Lena
CREE	CMA 1303 / 1306	**47869**	COB Holder Hybrid 634c Lena
CREE	CMA 1516	**47461**	COB Holder Hybrid 641a Lena
CREE	CMA 1825 / 1840	**47473**	COB Holder Hybrid 637a Lena
CREE	CMA 2550	**47447**	COB Holder Hybrid 639a Lena
CREE	CMB 1304 / 1306	**47869**	COB Holder Hybrid 634c Lena
CREE	CMB 1507 / 1510 / 1516	**47461**	COB Holder Hybrid 641a Lena
CREE	CMB 1818 / 1825	**47473**	COB Holder Hybrid 637a Lena
CREE	CMB 1840	**47873**	COB Holder Hybrid 637b Lena
CREE	CMB 2550	**47447**	COB Holder Hybrid 639a Lena
CREE	CMT 1407 / 1412 / 1420	**47444**	COB Holder Hybrid 634a Lena
CREE	CMT 1922 / 1925 / 1930 / 1945	**47576**	COB Holder Hybrid 633c Lena
CREE	CMT 2850 / 2870 / 2890	**47855**	COB Holder Hybrid 631b Lena
CREE	CMU 1003 / 1006 / 1010 / 1013	**47444**	COB Holder Hybrid 634a Lena
CREE	CMU 1516 / 1519 / 1526 / 1532	**47566**	COB Holder Hybrid 633a Lena
CREE	CMU 2236 / 2239 / 2258 / 2287	**47855**	COB Holder Hybrid 631b Lena
CREE	CXB 1304 / 1310	**47869**	COB Holder Hybrid 634c Lena

CREE	CXB 1507 / 1512 / 1520	**47461**	COB Holder Hybrid 641a Lena
CREE	CXB 1816 / 1820	**47473**	COB Holder Hybrid 637a Lena
CREE	CXB 1830	**47873**	COB Holder Hybrid 637b Lena
CREE	CXB 2530 / 2540	**47447**	COB Holder Hybrid 639a Lena
Edison	2PHE 03 / 06 / 09 / 13	**47444**	COB Holder Hybrid 634a Lena
Edison	2PHE 15 / 18 / 24 / 30	**47566**	COB Holder Hybrid 633a Lena
Edison	2PHE 55 / 60 / 83	**47446**	COB Holder Hybrid 631a Lena
Lextar	PB 06 / 09 / 13	**47444**	COB Holder Hybrid 634a Lena
Lextar	PB 16 / 19 / 26	**47566**	COB Holder Hybrid 633a Lena
Lextar	PB 38 / 54	**47446**	COB Holder Hybrid 631a Lena
Lumileds	Luxeon 1202s / 1202HD	**47457**	COB Holder Hybrid 652a Lena
Lumileds	Luxeon 1202 / 1203 / 1204HD	**47879**	COB Holder Hybrid 638b Lena
Lumileds	Luxeon 1205HD	**47879**	COB Holder Hybrid 638b Lena
Lumileds	Luxeon 1204 / 1205	**47450**	COB Holder Hybrid 632a Lena
Lumileds	Luxeon 1208 / 1210	**47450**	COB Holder Hybrid 632a Lena
Lumileds	Luxeon 1211	**47855**	COB Holder Hybrid 631b Lena
Lumileds	Luxeon 1213 / 1216 / 1812 / 1816	**47855**	COB Holder Hybrid 631b Lena
Lumileds	CS COB L02 / L04	**47444**	COB Holder Hybrid 634a Lena
Lumileds	CS COB L06 / L08 / L10	**47566**	COB Holder Hybrid 633a Lena
Lumileds	CS COB L11 / L13 / L16	**47446**	COB Holder Hybrid 631a Lena
Lumileds	CS COB R12 / R18	**47446**	COB Holder Hybrid 631a Lena
Lumileds	CX Plus HD S01H4, S0xH6	**47869**	COB Holder Hybrid 634c Lena
Lumileds	CX Plus HD S04H9	**47865**	COB Holder Hybrid 634b Lena
Lumileds	CX Plus S01Fx / S02Fx	**47869**	COB Holder Hybrid 634c Lena
Lumileds	CX Plus M02Fx / M03Fx	**47461**	COB Holder Hybrid 641a Lena
Lumileds	CX Plus L04Fx / L05Fx / L08Fx	**47473**	COB Holder Hybrid 637a Lena
Luminus	CXM-3-xC	**47444**	COB Holder Hybrid 634a Lena
Luminus	CHM-4-BH / CXM-4-xC	**47444**	COB Holder Hybrid 634a Lena
Luminus	CHM-6-BH / CXM-6-xC	**47444**	COB Holder Hybrid 634a Lena
Luminus	CIM/CLM/CXM-9-xC	**47444**	COB Holder Hybrid 634a Lena
Luminus	CHM-9-BH	**47566**	COB Holder Hybrid 633a Lena
Luminus	CXM-11-xC	**47566**	COB Holder Hybrid 633a Lena
Luminus	CGM/CIM/CLM/CXM-14-xC	**47566**	COB Holder Hybrid 633a Lena
Luminus	CXM-18 Gen6	**47446**	COB Holder Hybrid 631a Lena
Luminus	CGM/CIM/CLM/CXM-22-xC	**47446**	COB Holder Hybrid 631a Lena
Luminus	CDM-6 / CDM-9Gen1 DtW	**47893**	COB Holder Hybrid 652b Lena
Luminus	CDM-9 Gen2 DtW	**47859**	COB Holder Hybrid 632b Lena
Luminus	CDM-14/CDM-18 DtW	**47859**	COB Holder Hybrid 632b Lena
Luxtech	COB-WD-10-1512	**47457**	COB Holder Hybrid 652a Lena
Luxtech	COB-WD-17-2420	**47450**	COB Holder Hybrid 632a Lena
Nichia	NV..S007Z / NF..T012B	**47457**	COB Holder Hybrid 652a Lena
Nichia	NF..S024B / NT..S024B	**47457**	COB Holder Hybrid 652a Lena
Nichia	NJ..S024Z	**47457**	COB Holder Hybrid 652a Lena

Nichia	NV..L016Z / NV..L024Z	**47467**	COB Holder Hybrid 638a Lena
Nichia	NF..L036B / NF..L048B	**47467**	COB Holder Hybrid 638a Lena
Nichia	NF..L060B	**47467**	COB Holder Hybrid 638a Lena
Nichia	NV..J048Z / NF..J108B	**47951**	COB Holder Hybrid 663a Lena
Nichia	NF..J130B	**47951**	COB Holder Hybrid 663a Lena
Philips	Fortimo SLM12xx .. 1215 G7	**47457**	COB Holder Hybrid 652a Lena
Philips	Fortimo SLM12xx .. 1619 G7	**47879**	COB Holder Hybrid 638b Lena
Philips	Fortimo SLM12xx .. 2024 G7	**47450**	COB Holder Hybrid 632a Lena
Philips	Fortimo SLM12xx .. 2828 G7	**47855**	COB Holder Hybrid 631b Lena
Philips	Fortimo SLM12xx .. 1313 G7N	**47444**	COB Holder Hybrid 634a Lena
Philips	Fortimo SLM12xx .. 1919 G7N	**47566**	COB Holder Hybrid 633a Lena
Philips	Fortimo SLM12xx .. 2828 G7N	**47855**	COB Holder Hybrid 631b Lena
Philips	Fortimo SLM13xx .. 2024 G8 UHE	**47450**	COB Holder Hybrid 632a Lena
Philips	Fortimo SLM13xx .. 2828 G8 UHE	**47855**	COB Holder Hybrid 631b Lena
Prolight Opto	PASB	**47444**	COB Holder Hybrid 634a Lena
Prolight Opto	PASQ/PAPQ DimToWarm	**47444**	COB Holder Hybrid 634a Lena
Prolight Opto	PDSQ DimToWarm	**47893**	COB Holder Hybrid 652b Lena
Prolight Opto	PDSR DimToWarm	**47859**	COB Holder Hybrid 632b Lena
Samsung	LC 010C	**47444**	COB Holder Hybrid 634a Lena
Samsung	LC 020C / 030C / 040C	**47576**	COB Holder Hybrid 633c Lena
Samsung	LC 003D / 006D	**47444**	COB Holder Hybrid 634a Lena
Samsung	LC 009D / 013D	**47444**	COB Holder Hybrid 634a Lena
Samsung	LC 016D / 019D	**47576**	COB Holder Hybrid 633c Lena
Samsung	LC 026D / 033D	**47576**	COB Holder Hybrid 633c Lena
Samsung	LC 040D / 060D / 080D	**47855**	COB Holder Hybrid 631b Lena
Seoul	SAW* 0661	**47865**	COB Holder Hybrid 634b Lena
Seoul	SAW* 1062 / 1063	**47865**	COB Holder Hybrid 634b Lena
Seoul	SAW* 1564 / 1565 / 1566	**47576**	COB Holder Hybrid 633c Lena
Seoul	SAW* 22AA / 2296	**47446**	COB Holder Hybrid 631a Lena
Seoul	SAW* 2298 / 226A	**47446**	COB Holder Hybrid 631a Lena
Tridonic	SLE ADV8 LES 04 / 06	**47444**	COB Holder Hybrid 634a Lena
Tridonic	SLE ADV8 LES 09	**47444**	COB Holder Hybrid 634a Lena
Tridonic	SLE ADV8 LES 13	**47576**	COB Holder Hybrid 633c Lena
Tridonic	SLE ADV8 LES 15	**47576**	COB Holder Hybrid 633c Lena
Tridonic	SLE ADV8 LES 17	**47855**	COB Holder Hybrid 631b Lena
Tridonic	SLE ADV8 LES 21	**47855**	COB Holder Hybrid 631b Lena
Tridonic	SLE SNC8 LES 06	**47444**	COB Holder Hybrid 634a Lena
Tridonic	SLE SNC8 LES 09	**47444**	COB Holder Hybrid 634a Lena
Tridonic	SLE SNC8 LES 15	**47576**	COB Holder Hybrid 633c Lena
VS Lighting	DMS 102 ***W	**47444**	COB Holder Hybrid 634a Lena
VS Lighting	DMS 124 ***W	**47444**	COB Holder Hybrid 634a Lena
VS Lighting	DMS 125 / 126 / 128 ***W	**47566**	COB Holder Hybrid 633a Lena
VS Lighting	DMS 120 ***W	**47446**	COB Holder Hybrid 631a Lena

VS Lighting	DMS 12C / 18B ***W	**47446**	COB Holder Hybrid 631a Lena
VS Lighting	DMS 1208J	**47566**	COB Holder Hybrid 633a Lena
VS Lighting	DMS 1212J / 1812J	**47446**	COB Holder Hybrid 631a Lena
VS Lighting	VCA 042	**47865**	COB Holder Hybrid 634b Lena
VS Lighting	VCA2 122 / 123 / 124	**47865**	COB Holder Hybrid 634b Lena
VS Lighting	VCA2 126 / 128	**47576**	COB Holder Hybrid 633c Lena
VS Lighting	VCA2 1211 / 1213	**47855**	COB Holder Hybrid 631b Lena
VS Lighting	WU-M-618 DimToWarm	**47444**	COB Holder Hybrid 634a Lena
Xicato	XOB 04	**47865**	COB Holder Hybrid 634b Lena
Xicato	XOB 06 (B)	**47865**	COB Holder Hybrid 634b Lena
Xicato	XOB 09	**47444**	COB Holder Hybrid 634a Lena
Xicato	XOB 14	**47566**	COB Holder Hybrid 633a Lena
Xicato	XOB 23	**47446**	COB Holder Hybrid 631a Lena

Basishalter für Anwendungen, in denen keine besondere Anbindung zur Optik erforderlich ist.
Basic holders for applications without specific connection requirements to the optical system

Weitere Details unter More details at	www.bender-wirth.de	**Zertifikate /** certificates	
LED Halter B+W LED Holder B+W	4xx / Typ xx	**Ausweis-Nr.** **40041342**	**File** **E472943**

4xx / Typ xx

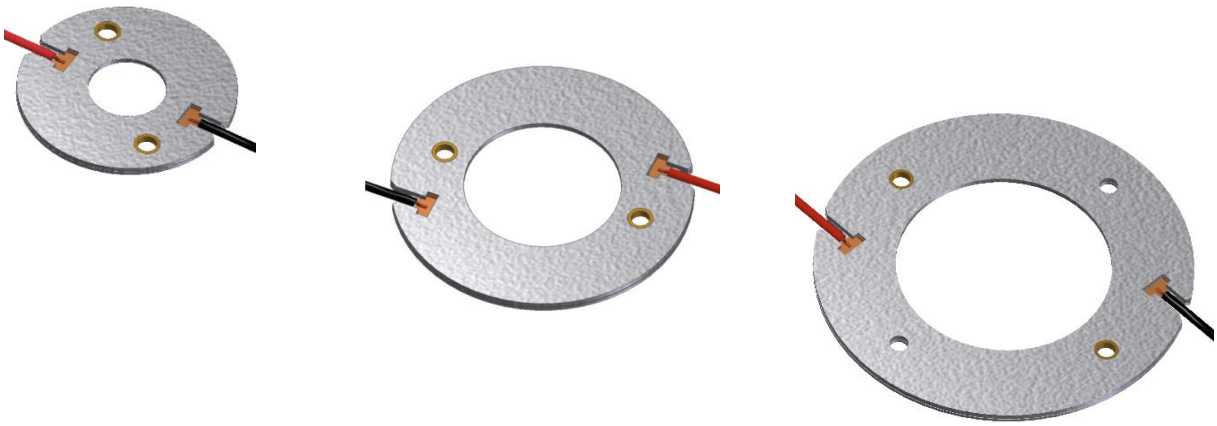

Mögliche Halter / COB Kombinationen / Holder / COB combinations

COB Hersteller COB Supplier	COB Typ COB Type	Halter Holder	Abmessungen Dimensions
Bridgelux	V3 HD / V4 HD Gen 7,8	460 Typ 1	29 x 27 / 21
Bridgelux	V6 HD Gen 7,8	464 Typ 1	Ø 35 / 25
Bridgelux	V9 HD / V11 HD Gen 7,8	496 Typ Z1	Ø 49 / 35
Bridgelux	V6 Gen 8,9 (just 2 pads!)	460 Typ 1	29 x 27 / 21
Bridgelux	V8 Gen 7,8,9 (4 pads)	460 Typ 1	29 x 27 / 21
Bridgelux	V10 Gen 7,8,9	486 Typ Z4	Ø 35 / 25
Bridgelux	V13 Gen 7,8,9	477 Typ 1	Ø 40 / 30
Bridgelux	V15 Gen 7,8,9	456 Typ L1-4	Ø 36,2 / 26,9
Bridgelux	V18 Gen 7,8,9	462 Typ 1	Ø 50 / 35
Bridgelux	V22 Gen 7,8,9	431 Typ 2	Ø 50 / 35
Bridgelux	Vesta DTW 6/9mm Gen 1,2	490 Typ L8	Ø 44 / 35
Bridgelux	Vesta DTW 13/15mm Gen 1,2	491 Typ L8	Ø 44 / 35
Bridgelux	Vesta DTW 18mm Gen 1	505 Typ Z1	Ø 49 / 35
Bridgelux	Vesta DTW 29mm Gen 1	506 Typ 1	Ø 55 / 43
Bridgelux	Vesta Tunable 6mm Gen 2	504 Typ L8	Ø 44 / 35
Bridgelux	Vesta Tunable 9mm Gen 2	489 Typ L8	Ø 44 / 35

Mögliche Halter / COB Kombinationen / Holder / COB combinations

COB Hersteller COB Supplier	COB Typ COB Type	Halter Holder	Abmessungen Dimensions
Bridgelux	Vesta Tunable 13mm Gen 2	492 Typ L8	Ø 44 / 35
Bridgelux	Vesta Tunable 15mm Gen 2	482 Typ L8	Ø 44 / 35
Bridgelux	Vesta Tunable 18mm Gen 2	483 Typ Z1	Ø 49 / 35
Bridgelux	Vesta Tunable 22mm Gen 2	494 Typ Z1	Ø 49 / 35
Bridgelux	Vesta Tunable 29mm Gen 2	503 Typ 1	Ø 55 / 43
Citizen	CLU 028 / 02J / 02Q	434 Typ 2	Ø 35 / 25
Citizen	CLU 038 / 03H / 03J / 03Q	433 Typ 2	Ø 40 / 30
Citizen	CLU 048 / 04H / 04J / 04Q	431 Typ 2	Ø 50 / 35
Citizen	CLU 058 / 05Q ..1825	458 Typ 1	Ø 65 / 50
Citizen	CLU 058 / 05H / 05Q ..3618	458 Typ 1 HV	Ø 65 / 50
Citizen	CLU 550 / 551	476 Typ 1 HV	Ø 65 / 50
Citizen	CLU 7L3 / 7S3	467 Typ 1	Ø 27 / 17
Citizen	CLU 7R3	485 Typ 1	Ø 27 / 17
Citizen	CLU 702 / 703 / 7A2 /7A3 / 7B2	434 Typ 2	Ø 35 / 25
Citizen	CLU 712 / 713	477 Typ 2	Ø 40 / 30
Citizen	CLU 723	477 Typ 2	Ø 40 / 30
Citizen	CLU 733	471 Typ 1	Ø 50 / 35
Citizen	LCN-C01B2 / C02B2 Tunable	481 Typ Z1	Ø 49 / 35
Citizen	LCN-C04B2 / C05B2 Tunable	481 Typ Z1	Ø 49 / 35
Citizen	LCN-C07A2 Tunable	507 Typ 1	
Citizen	LCN-C08A2 /C09A2 Tunable	508 Typ 1	
CREE	CHA 0304 / 0410 / 0612	434 Typ 2	Ø 35 / 25
CREE	CHA 0825	433 Typ 2	Ø 40 / 30
CREE	CMA 1303 / 1306	448 Typ 1	Ø 30 / 20
CREE	CMA 1516	441 Typ 2	Ø 35 / 25
CREE	CMA 1825 / 1840	437 Typ 2	Ø 40 / 30
CREE	CMA 2550	439 Typ 1	Ø 50 / 35
CREE	CMA 3090	447 Typ 1	Ø 50 / 35
CREE	CMB 1304 / 1306	448 Typ 1	Ø 30 / 20
CREE	CMB 1507 / 1510 / 1516	441 Typ 2	Ø 35 / 25
CREE	CMB 1818 / 1825	437 Typ 2	Ø 40 / 30
CREE	CMB 1840	457 Typ 1	Ø 40 / 30
CREE	CMB 2550	439 Typ 1	Ø 50 / 35
CREE	CMB 3090	447 Typ 1	Ø 50 / 35
CREE	CMT 1407 / 1412 / 1420	434 Typ 2	Ø 35 / 25

Mögliche Halter / COB Kombinationen / Holder / COB combinations

COB Hersteller COB Supplier	COB Typ COB Type	Halter Holder	Abmessungen Dimensions
CREE	CMT 1922 / 1925 / 1930 / 1945	477 Typ 2	Ø 40 / 30
CREE	CMT 2850 / 2870 / 2890	471 Typ 1	Ø 50 / 35
CREE	CMU 1003 / 1006 / 1010 / 1013	434 Typ 2	Ø 35 / 25
CREE	CMU 1516 / 1519 / 1526 / 1532	433 Typ 2	Ø 40 / 30
CREE	CMU 2236 / 2239 / 2258 / 2287	471 Typ 1	Ø 50 / 35
CREE	CXB 1304 / 1310	448 Typ 1	Ø 30 / 20
CREE	CXB 1507 / 1512 / 1520	441 Typ 2	Ø 35 / 25
CREE	CXB 1816 / 1820	437 Typ 2	Ø 40 / 30
CREE	CXB 1830	457 Typ 1	Ø 40 / 30
CREE	CXB 2530 / 2540	439 Typ 1	Ø 50 / 35
CREE	CXB 3050 / 3070	447 Typ 1	Ø 50 / 35
CREE	CXB 3590	449 Typ 1	Ø 60 / 45
Edison	2PHE 03 / 06 / 09 / 13	434 Typ 2	Ø 35 / 25
Edison	2PHE 15 / 18 / 24 / 30	433 Typ 2	Ø 40 / 30
Edison	2PHE 55 / 60 / 83	431 Typ 2	Ø 50 / 35
Lextar	PB 06 / 09 / 13	434 Typ 2	Ø 35 / 25
Lextar	PB 16 / 19 / 26	433 Typ 2	Ø 40 / 30
Lextar	PB 38 / 54	431 Typ 2	Ø 50 / 35
Lumileds	Luxeon 1202s / 1202HD	452 Typ 1	Ø 30 / 20
Lumileds	Luxeon 1202 / 1203 / 1204HD	480 Typ 1	33 x 27 / 28
Lumileds	Luxeon 1205HD	480 Typ 1	33 x 27 / 28
Lumileds	Luxeon 1204 / 1205	432 Typ 2	Ø 50 / 35
Lumileds	Luxeon 1208 / 1210	432 Typ 2	Ø 50 / 35
Lumileds	Luxeon 1211	431 Typ 2	Ø 50 / 35
Lumileds	Luxeon 1213 / 1216 / 1812 / 1816	431 Typ 2	Ø 50 / 35
Lumileds	Luxeon 1321 / 1825	458 Typ 1	Ø 65 / 50
Lumileds	CS COB L02 / L04	434 Typ 2	Ø 35 / 25
Lumileds	CS COB L06 / L08 / L10	433 Typ 2	Ø 40 / 30
Lumileds	CS COB L11 / L13 / L16	431 Typ 2	Ø 50 / 35
Lumileds	CS COB R12 / R18	431 Typ 2	Ø 50 / 35
Lumileds	CX Plus HD S01H4, S0xH6	448 Typ 1	Ø 30 / 20
Lumileds	CX Plus HD S04H9	4xx Typ 1	Ø 30 / 20
Lumileds	CX Plus S01Fx / S02Fx	448 Typ 1	Ø 30 / 20
Lumileds	CX Plus M02Fx / M03Fx	441 Typ 2	Ø 35 / 25

Mögliche Halter / COB Kombinationen / Holder / COB combinations

COB Hersteller COB Supplier	COB Typ COB Type	Halter Holder	Abmessungen Dimensions
Lumileds	CX Plus L04Fx / L05Fx / L08Fx	437 Typ 2	Ø 40 / 30
Luminus	CXM-3-xC	434 Typ 2	Ø 35 / 25
Luminus	CHM-4-BH / CXM-4-xC	434 Typ 2	Ø 35 / 25
Luminus	CHM-6-BH / CXM-6-xC	434 Typ 2	Ø 35 / 25
Luminus	CIM/CLM/CXM-9-xC	434 Typ 2	Ø 35 / 25
Luminus	CLM/CXM-9-xA	461 Typ 1	Ø 35 / 25
Luminus	CHM-9-BH	433 Typ 2	Ø 40 / 30
Luminus	CXM-11-xC	433 Typ 2	Ø 40 / 30
Luminus	CGM/CIM/CLM/CXM-14-xC	433 Typ 2	Ø 40 / 30
Luminus	CVM/CXM-18	453 Typ 1	Ø 40 / 30
Luminus	CXM-18 Gen6	431 Typ 1	Ø 40 / 30
Luminus	CGM/CIM/CLM/CXM-22-xC	431 Typ 2	Ø 50 / 35
Luminus	CVM/CXM-27	454 Typ 1	Ø 55 / 40
Luminus	CVM/CXM-32	458 Typ 1	Ø 65 / 50
Luminus	CVM-45	435 Typ 1	Ø 65 / 50
Luminus	CDM-6 / CDM-9Gen1 DtW	490 Typ L8	Ø 44 / 35
Luminus	CDM-9 Gen2 DtW	491 Typ L8	Ø 44 / 35
Luminus	CDM-14/CDM-18 DtW	491 Typ L8	Ø 44 / 35
Luminus	CTM-6 / CTM-9 TW	495 Typ L8	Ø 44 / 35
Luminus	CTM-14 TW	442 Typ L8	Ø 44 / 35
Luminus	CTM-14 RGBW	500 Typ L8-1	Ø 44 / 35
Luminus	CTM-18 Gen1 TW	442 Typ L8	Ø 44 / 35
Luminus	CTM-18 Gen2 TW	483 Typ L8	Ø 44 / 35
Luminus	CTM-22 TW	494 Typ Z1	Ø 49 / 35
Luxtech	COB-WD-10-1512	479 Typ 1	Ø 30 / 20
Luxtech	COB-WD-17-2420	491 Typ L8	Ø 44 / 35
Luxtech	COB-DN-16-2420	442 Typ L8	Ø 44 / 35
Nichia	NV..S007Z / NF..T012B	452 Typ 1	Ø 30 / 20
Nichia	NF..S024B / NT..S024B	452 Typ 1	Ø 30 / 20
Nichia	NJ..S024Z	452 Typ 1	Ø 30 / 20
Nichia	NV..L016Z / NV..L024Z	438 Typ 1	33 x 27 / 28
Nichia	NF..L036B / NF..L048B	438 Typ 1	33 x 27 / 28
Nichia	NF..L060B	438 Typ 1	33 x 27 / 28
Nichia	NV..J048Z / NF..J108B	463 Typ 1	Ø 50 / 35

Mögliche Halter / COB Kombinationen / Holder / COB combinations

COB Hersteller COB Supplier	COB Typ COB Type	Halter Holder	Abmessungen Dimensions
Nichia	NF..J130B	463 Typ 1	Ø 50 / 35
Nichia	NF..H306B	488 Typ 1 HV	Ø 65 / 50
Nichia	NJNWS012Z Tunable	495 Typ L8 HV	Ø 44 / 35
Nichia	NJCWL024Z Tunable	497 Typ L8 HV	Ø 44 / 35
Nichia	NVCWJ024Z Tunable	498 Typ L8 HV	Ø 44 / 35
Philips	Fortimo SLM12xx .. 1215 G7	452 Typ 1	Ø 30 / 20
Philips	Fortimo SLM12xx .. 1619 G7	480 Typ 1	33 x 27 / 28
Philips	Fortimo SLM12xx .. 2024 G7	432 Typ 2	Ø 50 / 35
Philips	Fortimo SLM12xx .. 2828 G7	431 Typ 2	Ø 50 / 35
Philips	Fortimo SLM12xx .. 1313 G7N	434 Typ 2	Ø 35 / 25
Philips	Fortimo SLM12xx .. 1919 G7N	433 Typ 2	Ø 40 / 30
Philips	Fortimo SLM12xx .. 2828 G7N	431 Typ 2	Ø 50 / 35
Philips	Fortimo SLM13xx .. 2024 G8 UHE	432 Typ 2	Ø 50 / 35
Philips	Fortimo SLM13xx .. 2828 G8 UHE	431 Typ 2	Ø 50 / 35
Philips	Fortimo L06A 1313 G7N Tunable	509 Typ L8	Ø 44 / 35
Philips	Fortimo L09A 1919 G7N Tunable	501 Typ L8	Ø 44 / 35
Prolight Opto	PASB	434 Typ 2	Ø 35 / 25
Prolight Opto	PASQ/PAPQ DimToWarm	434 Typ 2	Ø 35 / 25
Prolight Opto	PDSQ DimToWarm	490 Typ L8	Ø 44 / 35
Prolight Opto	PDSR DimToWarm	432 Typ 2	Ø 50 / 35
Prolight Opto	PDSJ Tunable	442 Typ L8	Ø 44 / 35
Samsung	LC 010C	434 Typ 1	Ø 40 / 30
Samsung	LC 020C / 030C / 040C	477 Typ 1	Ø 40 / 30
Samsung	LC 003D / 006D	434 Typ 2	Ø 35 / 25
Samsung	LC 009D / 013D	434 Typ 2	Ø 35 / 25
Samsung	LC 016D / 019D	477 Typ 1	Ø 40 / 30
Samsung	LC 026D / 033D	477 Typ 1	Ø 40 / 30
Samsung	LC 040D / 060D / 080D	431 Typ 2	Ø 50 / 35
Samsung	LC010T Tunable	501 Typ L8	Ø 44 / 35
Samsung	LC020T Tunable	501 Typ L8	Ø 44 / 35
Samsung	LC035T Tunable	502 Typ 1	Ø 50 / 35
Seoul	SAW* 0661	434 Typ 2	Ø 35 / 25
Seoul	SAW* 1062 / 1063	434 Typ 2	Ø 35 / 25

Mögliche Halter / COB Kombinationen / Holder / COB combinations

COB Hersteller COB Supplier	COB Typ COB Type	Halter Holder	Abmessungen Dimensions
Seoul	SAW* 1564 / 1565 / 1566	477 Typ 1	Ø 40 / 30
Seoul	SAW* 22AA / 2296	431 Typ 2	Ø 50 / 35
Seoul	SAW* 2298 / 226A	431 Typ 2	Ø 50 / 35
Seoul	SAW* 33EA / 33GC	458 Typ 1 HV	Ø 65 / 50
Tridonic	SLE ADV8 LES 04 / 06	434 Typ 2	Ø 35 / 25
Tridonic	SLE ADV8 LES 09	434 Typ 2	Ø 35 / 25
Tridonic	SLE ADV8 LES 13	433 Typ 2	Ø 40 / 30
Tridonic	SLE ADV8 LES 15	433 Typ 2	Ø 40 / 30
Tridonic	SLE ADV8 LES 17	431 Typ 1	Ø 50 / 35
Tridonic	SLE ADV8 LES 21	431 Typ 1	Ø 50 / 35
Tridonic	SLE SNC8 LES 06	434 Typ 2	Ø 35 / 25
Tridonic	SLE SNC8 LES 09	434 Typ 2	Ø 35 / 25
Tridonic	SLE SNC8 LES 15	433 Typ 2	Ø 40 / 30
VS Lighting	DMS 102 ***W	434 Typ 2	Ø 35 / 25
VS Lighting	DMS 124 ***W	434 Typ 2	Ø 35 / 25
VS Lighting	DMS 125 / 126 / 128 ***W	433 Typ 2	Ø 40 / 30
VS Lighting	DMS 120 ***W	431 Typ 2	Ø 50 / 35
VS Lighting	DMS 12C / 18B ***W	431 Typ 2	Ø 50 / 35
VS Lighting	DMS 1208J	433 Typ 2	Ø 40 / 30
VS Lighting	DMS 1212J / 1812J	431 Typ 2	Ø 50 / 35
VS Lighting	VCA 042	486 Typ Z4	Ø 35 / 25
VS Lighting	VCA2 122 / 123 / 124	486 Typ Z4	Ø 35 / 25
VS Lighting	VCA2 126 / 128	477 Typ 2	Ø 40 / 30
VS Lighting	VCA2 1211 / 1213	471 Typ 2	Ø 50 / 35
VS Lighting	TW 1914 Tunable	493 Typ L8	Ø 44 / 35
VS Lighting	TW 2820 Tunable	494 Typ Z1	Ø 49 / 35
VS Lighting	WU-M-618 DimToWarm	434 Typ 2	Ø 35 / 25
Xicato	XOB 04	486 Typ Z4	Ø 35 / 25
Xicato	XOB 06 (B)	486 Typ Z4	Ø 35 / 25
Xicato	XOB 09	434 Typ 2	Ø 35 / 25
Xicato	XOB 14	433 Typ 2	Ø 40 / 30
Xicato	XOB 23	431 Typ 2	Ø 50 / 35
Xicato	XOB 32	458 Typ 1	Ø 65 / 50

LEDiL®

™2X2mx

2x2MX System

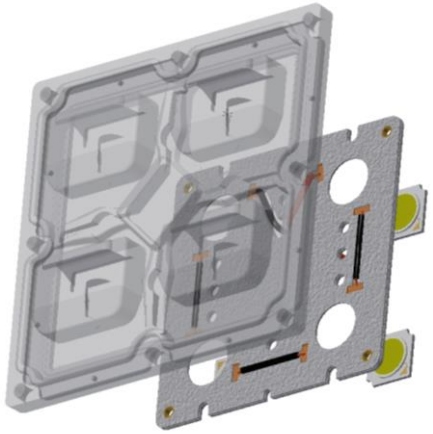

LEDiL® and 2X2MX are registered trademarks of Ledil Oy in the European Union, the U.S.A and certain other countries.

LEDiL Optik
LEDiL optics

STRADA 2x2MX
STRADA 2x2MXS

Hersteller Webseite
Manufacturer website

www.ledil.com

LED Halter B+W
LED Holder B+W

4xx / Typ 2x2MX HV

Holder 4xx Type 2x2MX HV

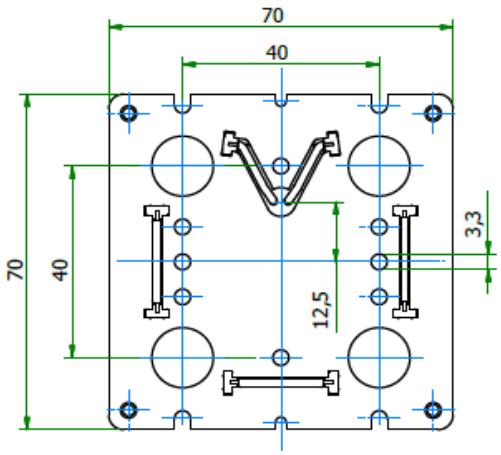

e.g. LEDiL Strada 2x2MXS DWC2

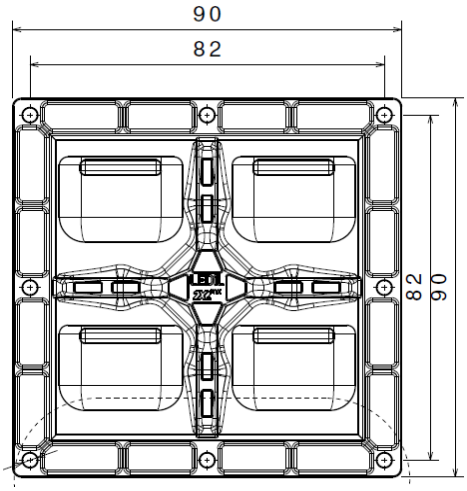

Passende Kühlkörper / Suitable heat sinks:

MechaTronix

CoolBlock SQ
CoolBeam SQ

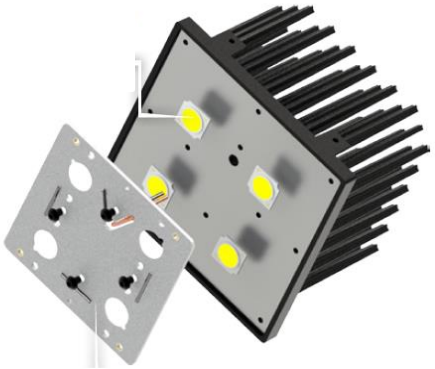

MechaTronix Cooler
MechaTronix Cooler

CoolBlock SQ-01

Hersteller Webseite
Manufacturer website

www.led-heatsink.com

Die dargestellten Halterlösungen sind Mehrfachhalter, bei denen die COBs im Halter in Serie geschaltet werden. Daher muss bei Serienschaltungen von mehreren Modulen die gesamte Vorwärtsspannung betrachtet werden.
The described holder solution is a multiple COB holder where all COBs are prewired in a serial connection. Therefore the total forward voltage maybe critical if holders are connected in series.

COB forward Voltage **36 V** (Standard)		COB forward Voltage **18 V** (special versions like Citizen CLU028 0604 or CREE 1512 available)	
holder rated voltage **150V DC**	holder rated voltage **450V DC** by using **insulating TIM**	holder rated voltage **150V DC**	holder rated voltage **450V DC** by using **insulating TIM**
single use only	up to **2 holders** in series	up to **2 holders** in series	up to **4 holders** in series

Die max. Ausgangsspannung des LED Treibers kann eine Veränderung der o.g. Anordnung zur Folge haben und muss daher überprüft werden.
The max output voltage may have an influence on the proposal above and need to be checked.

Mögliche Halter / COB Kombinationen / Holder / COB combinations 2x2MX System

COB Hersteller COB Supplier	COB Typ COB Type	Halter Holder	Adapter Base part
Bridgelux	V3 HD / V4 HD Gen 7,8	460 Typ 2x2MX HV	see LEDiL website
Bridgelux	V6 HD Gen 7,8	464 Typ 2x2MX HV	see LEDiL website
Bridgelux	V6 Gen 8,9 (just 2 pads!)	460 Typ 2x2MX HV	see LEDiL website
Bridgelux	V8 Gen 7,8,9 (4 pads)	460 Typ 2x2MX HV	see LEDiL website
Bridgelux	V10 Gen 7,8,9	486 Typ 2x2MX HV	see LEDiL website
Bridgelux	Vesta DTW 6/9mm Gen 1,2	490 Typ 2x2MX HV	see LEDiL website
Bridgelux	Vesta Tunable 6mm Gen 2	504 Typ 2x2MX HV	see LEDiL website
Bridgelux	Vesta Tunable 9mm Gen 2	489 Typ 2x2MX HV	see LEDiL website
Citizen	CLU 028 / 02J / 02Q	434 Typ 2x2MX HV	see LEDiL website
Citizen	CLU 7R3	485 Typ 2x2MX HV	see LEDiL website
Citizen	CLU 702 / 703 / 7A2 /7A3 / 7B2	434 Typ 2x2MX HV	see LEDiL website
CREE	CHA 0304 / 0410 / 0612	434 Typ 2x2MX HV	see LEDiL website
CREE	CMA 1303 / 1306	448 Typ 2x2MX HV	see LEDiL website
CREE	CMA 1516	441 Typ 2x2MX HV	see LEDiL website
CREE	CMB 1304 / 1306	448 Typ 2x2MX HV	see LEDiL website
CREE	CMB 1507 / 1510 / 1516	441 Typ 2x2MX HV	see LEDiL website
CREE	CMT 1407 / 1412 / 1420	434 Typ 2x2MX HV	see LEDiL website
CREE	CMU 1003 / 1006 / 1010 / 1013	434 Typ 2x2MX HV	see LEDiL website
CREE	CXB 1304 / 1310	448 Typ 2x2MX HV	see LEDiL website
CREE	CXB 1507 / 1512 / 1520	441 Typ 2x2MX HV	see LEDiL website

Mögliche Halter / COB Kombinationen / Holder / COB combinations 2x2MX System

COB Hersteller COB Supplier	COB Typ COB Type	Halter Holder	Adapter Base part
Edison	2PHE 03 / 06 / 09 / 13	434 Typ 2x2MX HV	see LEDiL website
Lextar	PB 06 / 09 / 13	434 Typ 2x2MX HV	see LEDiL website
Lumileds	Luxeon 1202s / 1202HD	452 Typ 2x2MX HV	see LEDiL website
Lumileds	CS COB L02 / L04	434 Typ 2x2MX HV	see LEDiL website
Lumileds	CX Plus HD S01H4, S0xH6	448 Typ 2x2MX HV	see LEDiL website
Lumileds	CX Plus HD S04H9	4xx Typ 2x2MX HV	see LEDiL website
Lumileds	CX Plus S01Fx / S02Fx	448 Typ 2x2MX HV	see LEDiL website
Lumileds	CX Plus M02Fx / M03Fx	441 Typ 2x2MX HV	see LEDiL website
Luminus	CXM-3-xC	434 Typ 2x2MX HV	see LEDiL website
Luminus	CHM-4-BH / CXM-4-xC	434 Typ 2x2MX HV	see LEDiL website
Luminus	CHM-6-BH / CXM-6-xC	434 Typ 2x2MX HV	see LEDiL website
Luminus	CIM/CLM/CXM-9-xC	434 Typ 2x2MX HV	see LEDiL website
Luminus	CLM/CXM-9-xA	461 Typ 2x2MX HV	see LEDiL website
Luminus	CDM-6 / CDM-9Gen1 DtW	490 Typ 2x2MX HV	see LEDiL website
Luminus	CTM-6 / CTM-9 TW	495 Typ 2x2MX HV	see LEDiL website
Luxtech	COB-WD-10-1512	479 Typ 2x2MX HV	see LEDiL website
Nichia	NV..S007Z / NF..T012B	452 Typ 2x2MX HV	see LEDiL website
Nichia	NF..S024B / NT..S024B	452 Typ 2x2MX HV	see LEDiL website
Nichia	NJ..S024Z	452 Typ 2x2MX HV	see LEDiL website
Nichia	NJNWS012Z Tunable	495 Typ 2x2MX HV HV	see LEDiL website
Philips	Fortimo SLM12xx .. 1215 G7	452 Typ 2x2MX HV	see LEDiL website
Philips	Fortimo SLM12xx .. 1313 G7N	434 Typ 2x2MX HV	see LEDiL website
Philips	Fortimo L06A 1313 G7N Tunable	509 Typ 2x2MX HV	see LEDiL website
Prolight Opto	PASB	434 Typ 2x2MX HV	see LEDiL website
Prolight Opto	PASQ/PAPQ DimToWarm	434 Typ 2x2MX HV	see LEDiL website
Prolight Opto	PDSQ DimToWarm	490 Typ 2x2MX HV	see LEDiL website
Samsung	LC 010C	434 Typ 2x2MX HV	see LEDiL website
Samsung	LC 003D / 006D	434 Typ 2x2MX HV	see LEDiL website

Mögliche Halter / COB Kombinationen / Holder / COB combinations 2x2MX System

COB Hersteller COB Supplier	COB Typ COB Type	Halter Holder	Adapter Base part
Samsung	LC 009D / 013D	434 Typ 2x2MX HV	see LEDiL website
Seoul	SAW* 0661	434 Typ 2x2MX HV	see LEDiL website
Seoul	SAW* 1062 / 1063	434 Typ 2x2MX HV	see LEDiL website
Tridonic	SLE ADV8 LES 04 / 06	434 Typ 2x2MX HV	see LEDiL website
Tridonic	SLE ADV8 LES 09	434 Typ 2x2MX HV	see LEDiL website
Tridonic	SLE SNC8 LES 06	434 Typ 2x2MX HV	see LEDiL website
Tridonic	SLE SNC8 LES 09	434 Typ 2x2MX HV	see LEDiL website
VS Lighting	DMS 102 ***W	434 Typ 2x2MX HV	see LEDiL website
VS Lighting	DMS 124 ***W	434 Typ 2x2MX HV	see LEDiL website
VS Lighting	VCA 042	486 Typ 2x2MX HV	see LEDiL website
VS Lighting	VCA2 122 / 123 / 124	486 Typ 2x2MX HV	see LEDiL website
VS Lighting	WU-M-618 DimToWarm	434 Typ 2x2MX HV	see LEDiL website
Xicato	XOB 04	486 Typ 2x2MX HV	see LEDiL website
Xicato	XOB 06 (B)	486 Typ 2x2MX HV	see LEDiL website
Xicato	XOB 09	434 Typ 2x2MX HV	see LEDiL website

LEDiL®

CLAMP System
(3 Hook)

Passende LEDiL Optik **Suitable** LEDiL optics	**ANGELA** **ANGELETTE** **ANGELINA** **MOLLY** **RONDA**
LEDiL Adapter LEDiL adaptor	C13658_CLAMP-VERO13-18 C13584_CLAMP-VERO29
Hersteller Webseite Manufacturer website	www.ledil.com
LED Halter B+W LED Holder B+W	4xx / Typ L1 4xx / Typ L2 4xx / Typ L3

4xx Typ L1

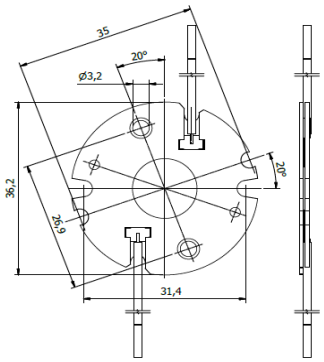

4xx Typ L2

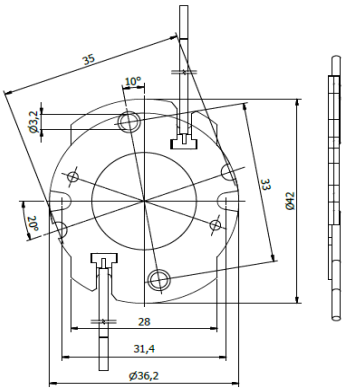

C13658_CLAMP-VERO13-18

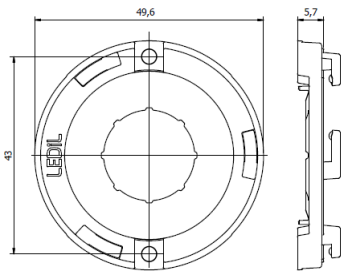

4xx Typ L3

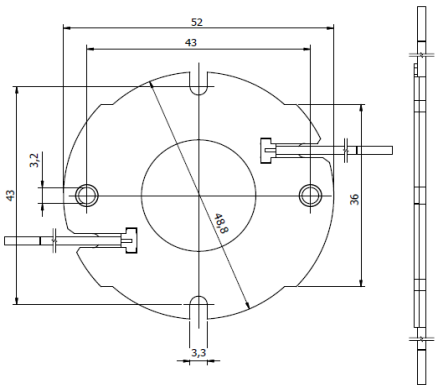

C13584_CLAMP-VERO29

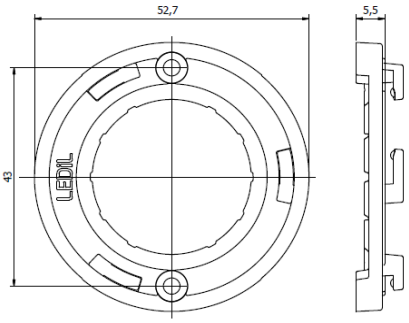

Mögliche Halter / COB Kombinationen / Holder / COB combinations LEDiL Clamp System

COB Hersteller COB Supplier	COB Typ COB Type	LES LES	Halter Holder	Adapter Base part
Bridgelux	V9 HD / V11 HD Gen 7,8	9 mm	496 Typ L1	C13658_CLAMP-VERO13-18
Bridgelux	V6 Gen 8,9 (just 2 pads!)	9 mm	460 Typ L1	C13658_CLAMP-VERO13-18
Bridgelux	V8 Gen 7,8,9 (4 pads)	9 mm	460 Typ L1	C13658_CLAMP-VERO13-18
Bridgelux	V10 Gen 7,8,9	10 mm	486 Typ L1	C13658_CLAMP-VERO13-18
Bridgelux	V13 Gen 7,8,9	15 mm	477 Typ L1	C13658_CLAMP-VERO13-18
Bridgelux	V15 Gen 7,8,9	15 mm	456 Typ L2	C13658_CLAMP-VERO13-18
Bridgelux	V18 Gen 7,8,9	20 mm	462 Typ L3	C13584_CLAMP-VERO29
Bridgelux	V22 Gen 7,8,9	23 mm	431 Typ L3	C13584_CLAMP-VERO29
Bridgelux	Vesta DTW 6/9mm Gen 1,2	9 mm	490 Typ L1	C13658_CLAMP-VERO13-18
Bridgelux	Vesta DTW 13/15mm Gen 1,2	16 mm	491 Typ L2	C13658_CLAMP-VERO13-18
Bridgelux	Vesta DTW 18mm Gen 1	18 mm	505 Typ L3	C13584_CLAMP-VERO29
Bridgelux	Vesta Tunable 9mm Gen 2	10 mm	489 Typ L1	C13658_CLAMP-VERO13-18
Bridgelux	Vesta Tunable 13mm Gen 2	15 mm	492 Typ L1	C13658_CLAMP-VERO13-18
Bridgelux	Vesta Tunable 15mm Gen 2	16 mm	482 Typ L2	C13658_CLAMP-VERO13-18
Bridgelux	Vesta Tunable 18mm Gen 2	20 mm	483 Typ L3	C13584_CLAMP-VERO29
Bridgelux	Vesta Tunable 22mm Gen 2	23 mm	494 Typ L3	C13584_CLAMP-VERO29
Citizen	CLU 028 / 02J / 02Q	10 mm	434 Typ L1	C13658_CLAMP-VERO13-18
Citizen	CLU 038 / 03H / 03J / 03Q	15 mm	433 Typ L1	C13658_CLAMP-VERO13-18
Citizen	CLU 048 / 04H / 04J / 04Q	22 mm	431 Typ L3	C13584_CLAMP-VERO29
Citizen	CLU 712 / 713	9 mm	477 Typ L1	C13658_CLAMP-VERO13-18
Citizen	CLU 723	11 mm	477 Typ L1	C13658_CLAMP-VERO13-18
Citizen	CLU 733	13 mm	471 Typ L3	C13584_CLAMP-VERO29
Citizen	LCN-C01B2 / C02B2 Tunable	15 mm	481 Typ L2	C13658_CLAMP-VERO13-18
Citizen	LCN-C04B2 / C05B2 Tunable	15 mm	481 Typ L2	C13658_CLAMP-VERO13-18
CREE	CHA 0825	9 mm	433 Typ L1	C13658_CLAMP-VERO13-18
CREE	CMA 1516	9 mm	441 Typ L1	C13658_CLAMP-VERO13-18
CREE	CMA 1825 / 1840	14 mm	437 Typ L1	C13658_CLAMP-VERO13-18
CREE	CMA 2550	19 mm	439 Typ L3	C13584_CLAMP-VERO29
CREE	CMA 3090	23 mm	447 Typ L3	C13584_CLAMP-VERO29
CREE	CMB 1507 / 1510 / 1516	9 mm	441 Typ L1	C13658_CLAMP-VERO13-18
CREE	CMB 1818 / 1825	12 mm	437 Typ L1	C13658_CLAMP-VERO13-18
CREE	CMB 1840	14 mm	457 Typ L1	C13658_CLAMP-VERO13-18
CREE	CMB 2550	19 mm	439 Typ L3	C13584_CLAMP-VERO29
CREE	CMB 3090	23 mm	447 Typ L3	C13584_CLAMP-VERO29
CREE	CMT 1407 / 1412 / 1420	10 mm	434 Typ L1	C13658_CLAMP-VERO13-18

Mögliche Halter / COB Kombinationen / Holder / COB combinations LEDiL Clamp System

COB Hersteller COB Supplier	COB Typ COB Type	LES LES	Halter Holder	Adapter Base part
CREE	CMT 1922 / 1925 / 1930 / 1945	15 mm	477 Typ L1	C13658_CLAMP-VERO13-18
CREE	CMT 2850 / 2870 / 2890	22 mm	471 Typ L3	C13584_CLAMP-VERO29
CREE	CMU 1003 / 1006 / 1010 / 1013	10 mm	434 Typ L1	C13658_CLAMP-VERO13-18
CREE	CMU 1516 / 1519 / 1526 / 1532	15 mm	433 Typ L1	C13658_CLAMP-VERO13-18
CREE	CMU 2236 / 2239 / 2258 / 2287	22 mm	471 Typ L3	C13584_CLAMP-VERO29
CREE	CXB 1507 / 1512 / 1520	9 mm	441 Typ L1	C13658_CLAMP-VERO13-18
CREE	CXB 1816 / 1820	12 mm	437 Typ L1	C13658_CLAMP-VERO13-18
CREE	CXB 1830	14 mm	457 Typ L1	C13658_CLAMP-VERO13-18
CREE	CXB 2530 / 2540	19 mm	439 Typ L3	C13584_CLAMP-VERO29
CREE	CXB 3050 / 3070	23 mm	447 Typ L3	C13584_CLAMP-VERO29
Edison	2PHE 03 / 06 / 09 / 13	10 mm	434 Typ L1	C13658_CLAMP-VERO13-18
Edison	2PHE 15 / 18 / 24 / 30	16 mm	433 Typ L1	C13658_CLAMP-VERO13-18
Edison	2PHE 55 / 60 / 83	23 mm	431 Typ L3	C13584_CLAMP-VERO29
Lextar	PB 06 / 09 / 13	10 mm	434 Typ L1	C13658_CLAMP-VERO13-18
Lextar	PB 16 / 19 / 26	15 mm	433 Typ L1	C13658_CLAMP-VERO13-18
Lextar	PB 38 / 54	22 mm	431 Typ L3	C13584_CLAMP-VERO29
Lumileds	Luxeon 1202 / 1203 / 1204HD	9 mm	480 Typ L1	C13658_CLAMP-VERO13-18
Lumileds	Luxeon 1205HD	11 mm	480 Typ L1	C13658_CLAMP-VERO13-18
Lumileds	Luxeon 1204 / 1205	13 mm	432 Typ L2	C13658_CLAMP-VERO13-18
Lumileds	Luxeon 1208 / 1210	15 mm	432 Typ L2	C13658_CLAMP-VERO13-18
Lumileds	Luxeon 1211	19 mm	431 Typ L3	C13584_CLAMP-VERO29
Lumileds	Luxeon 1213 / 1216 / 1812 / 1816	23 mm	431 Typ L3	C13584_CLAMP-VERO29
Lumileds	CS COB L02 / L04	10 mm	434 Typ L1	C13658_CLAMP-VERO13-18
Lumileds	CS COB L06 / L08 / L10	15 mm	433 Typ L1	C13658_CLAMP-VERO13-18
Lumileds	CS COB L11 / L13 / L16	22 mm	431 Typ L3	C13584_CLAMP-VERO29
Lumileds	CS COB R12 / R18	22 mm	431 Typ L3	C13584_CLAMP-VERO29
Lumileds	CX Plus HD S04H9	9 mm	4xx Typ L1	C13658_CLAMP-VERO13-18
Lumileds	CX Plus M02Fx / M03Fx	9 mm	441 Typ L1	C13658_CLAMP-VERO13-18
Lumileds	CX Plus L04Fx / L05Fx / L08Fx	14 mm	437 Typ L1	C13658_CLAMP-VERO13-18
Luminus	CIM/CLM/CXM-9-xC	9 mm	434 Typ L1	C13658_CLAMP-VERO13-18
Luminus	CLM/CXM-9-xA	10 mm	461 Typ L1	C13658_CLAMP-VERO13-18
Luminus	CHM-9-BH	9 mm	433 Typ L1	C13658_CLAMP-VERO13-18
Luminus	CXM-11-xC	12 mm	433 Typ L1	C13658_CLAMP-VERO13-18

Mögliche Halter / COB Kombinationen / Holder / COB combinations LEDiL Clamp System

COB Hersteller COB Supplier	COB Typ COB Type	LES LES	Halter Holder	Adapter Base part
Luminus	CGM/CIM/CLM/CXM-14-xC	15 mm	433 Typ L1	C13658_CLAMP-VERO13-18
Luminus	CVM/CXM-18	18 mm	453 Typ L2	C13658_CLAMP-VERO13-18
Luminus	CXM-18 Gen6	18 mm	431 Typ L3	C13584_CLAMP-VERO29
Luminus	CGM/CIM/CLM/CXM-22-xC	22 mm	431 Typ L3	C13584_CLAMP-VERO29
Luminus	CDM-6 / CDM-9Gen1 DtW	10 mm	490 Typ L1	C13658_CLAMP-VERO13-18
Luminus	CDM-9 Gen2 DtW	9 mm	491 Typ L2	C13658_CLAMP-VERO13-18
Luminus	CDM-14/CDM-18 DtW	17 mm	491 Typ L2	C13658_CLAMP-VERO13-18
Luminus	CTM-6 / CTM-9 TW	10 mm	495 Typ L1	C13658_CLAMP-VERO13-18
Luminus	CTM-14 TW	18 mm	442 Typ L2	C13658_CLAMP-VERO13-18
Luminus	CTM-18 Gen1 TW	18 mm	442 Typ L2	C13658_CLAMP-VERO13-18
Luminus	CTM-18 Gen2 TW	20 mm	483 Typ L3	C13584_CLAMP-VERO29
Luminus	CTM-22 TW	22 mm	494 Typ L3	C13584_CLAMP-VERO29
Luxtech	COB-WD-17-2420	15 mm	491 Typ L2	C13658_CLAMP-VERO13-18
Nichia	NV..L016Z / NV..L024Z	9 mm	438 Typ L1	C13658_CLAMP-VERO13-18
Nichia	NF..L036B / NF..L048B	12 mm	438 Typ L1	C13658_CLAMP-VERO13-18
Nichia	NF..L060B	12 mm	438 Typ L1	C13658_CLAMP-VERO13-18
Nichia	NV..J048Z / NF..J108B	15 mm	463 Typ L2	C13658_CLAMP-VERO13-18
Nichia	NF..J130B	15 mm	463 Typ L2	C13658_CLAMP-VERO13-18
Nichia	NVCWJ024Z Tunable	11 mm	498 Typ L2 HV	C13658_CLAMP-VERO13-18
Philips	Fortimo SLM12xx .. 1619 G7	9 mm	480 Typ L1	C13658_CLAMP-VERO13-18
Philips	Fortimo SLM12xx .. 2024 G7	15 mm	432 Typ L2	C13658_CLAMP-VERO13-18
Philips	Fortimo SLM12xx .. 2828 G7	23 mm	431 Typ L3	C13584_CLAMP-VERO29
Philips	Fortimo SLM12xx .. 1313 G7N	10 mm	434 Typ L1	C13658_CLAMP-VERO13-18
Philips	Fortimo SLM12xx .. 1919 G7N	15 mm	433 Typ L1	C13658_CLAMP-VERO13-18
Philips	Fortimo SLM12xx .. 2828 G7N	22 mm	431 Typ L3	C13584_CLAMP-VERO29
Philips	Fortimo SLM13xx .. 2024 G8 UHE	15 mm	432 Typ L2	C13658_CLAMP-VERO13-18
Philips	Fortimo SLM13xx .. 2828 G8 UHE	23 mm	431 Typ L3	C13584_CLAMP-VERO29
Philips	Fortimo L09A 1919 G7N Tunable	9 mm	501 Typ L1	C13658_CLAMP-VERO13-18
Prolight Opto	PASB	10 mm	434 Typ L1	C13658_CLAMP-VERO13-18
Prolight Opto	PASQ/PAPQ DimToWarm	10 mm	434 Typ L1	C13658_CLAMP-VERO13-18
Prolight Opto	PDSR DimToWarm	15 mm	432 Typ L2	C13658_CLAMP-VERO13-18
Samsung	LC 020C / 030C / 040C	12 mm	477 Typ L1	C13658_CLAMP-VERO13-18

Mögliche Halter / COB Kombinationen / Holder / COB combinations LEDiL Clamp System

COB Hersteller COB Supplier	COB Typ COB Type	LES LES	Halter Holder	Adapter Base part
Samsung	LC 003D / 006D	10 mm	434 Typ L1	C13658_CLAMP-VERO13-18
Samsung	LC 009D / 013D	10 mm	434 Typ L1	C13658_CLAMP-VERO13-18
Samsung	LC 016D / 019D	16 mm	477 Typ L1	C13658_CLAMP-VERO13-18
Samsung	LC 026D / 033D	16 mm	477 Typ L1	C13658_CLAMP-VERO13-18
Samsung	LC 040D / 060D / 080D	23 mm	431 Typ L3	C13584_CLAMP-VERO29
Samsung	LC010T Tunable	10 mm	501 Typ L1	C13658_CLAMP-VERO13-18
Samsung	LC020T Tunable	13 mm	501 Typ L1	C13658_CLAMP-VERO13-18
Samsung	LC035T Tunable	22 mm	502 Typ L3	C13584_CLAMP-VERO29
Seoul	SAW* 1062 / 1063	10 mm	434 Typ L1	C13658_CLAMP-VERO13-18
Seoul	SAW* 1564 / 1565 / 1566	15 mm	477 Typ L1	C13658_CLAMP-VERO13-18
Seoul	SAW* 22AA / 2296	22 mm	431 Typ L3	C13584_CLAMP-VERO29
Seoul	SAW* 2298 / 226A	22 mm	431 Typ L3	C13584_CLAMP-VERO29
Tridonic	SLE ADV8 LES 04 / 06	9 mm	434 Typ L1	C13658_CLAMP-VERO13-18
Tridonic	SLE ADV8 LES 09	9 mm	434 Typ L1	C13658_CLAMP-VERO13-18
Tridonic	SLE ADV8 LES 13	13 mm	433 Typ L1	C13658_CLAMP-VERO13-18
Tridonic	SLE ADV8 LES 15	15 mm	433 Typ L1	C13658_CLAMP-VERO13-18
Tridonic	SLE ADV8 LES 17	17 mm	431 Typ L3	C13584_CLAMP-VERO29
Tridonic	SLE ADV8 LES 21	21 mm	431 Typ L3	C13584_CLAMP-VERO29
Tridonic	SLE SNC8 LES 09	10 mm	434 Typ L1	C13658_CLAMP-VERO13-18
Tridonic	SLE SNC8 LES 15	15 mm	433 Typ L1	C13658_CLAMP-VERO13-18
VS Lighting	DMS 124 ***W	9 mm	434 Typ L1	C13658_CLAMP-VERO13-18
VS Lighting	DMS 125 / 126 / 128 ***W	14 mm	433 Typ L1	C13658_CLAMP-VERO13-18
VS Lighting	DMS 120 ***W	17 mm	431 Typ L3	C13584_CLAMP-VERO29
VS Lighting	DMS 12C / 18B ***W	20 mm	431 Typ L3	C13584_CLAMP-VERO29
VS Lighting	DMS 1208J	15 mm	433 Typ L1	C13658_CLAMP-VERO13-18
VS Lighting	DMS 1212J / 1812J	22 mm	431 Typ L3	C13584_CLAMP-VERO29
VS Lighting	VCA2 122 / 123 / 124	9 mm	486 Typ L1	C13658_CLAMP-VERO13-18
VS Lighting	VCA2 126 / 128	14 mm	477 Typ L1	C13658_CLAMP-VERO13-18
VS Lighting	VCA2 1211 / 1213	20 mm	471 Typ L3	C13584_CLAMP-VERO29
VS Lighting	TW 1914 Tunable	14 mm	493 Typ L1	C13658_CLAMP-VERO13-18
VS Lighting	TW 2820 Tunable	20 mm	494 Typ L3	C13584_CLAMP-VERO29
VS Lighting	WU-M-618 DimToWarm	10 mm	434 Typ L1	C13658_CLAMP-VERO13-18
Xicato	XOB 09	10 mm	434 Typ L1	C13658_CLAMP-VERO13-18

Mögliche Halter / COB Kombinationen / Holder / COB combinations **LEDiL Clamp System**

COB Hersteller COB Supplier	COB Typ COB Type	LES LES	Halter Holder	Adapter Base part
Xicato	XOB 14	15 mm	433 Typ L1	C13658_CLAMP-VERO13-18
Xicato	XOB 23	23 mm	431 Typ L3	C13584_CLAMP-VERO29

LEDiL®	HEKLA System
Passende LEDiL Optik Suitable LEDiL optics	**BARBARA-G2** **BROOKE / MIRELLA -G2** **ADELIA 50/70/110** **CARMEN 50/70** **ZORYA, RONDA, WINNIE** **AMY / AMY ZOOM 50/70** **YASMEEN / Y.ZOOM 50/70** **ILONA / ILONA ZOOM**
LEDiL Adapter LEDiL adaptor	C16142_HEKLA-SOCKET-K
Hersteller Webseite Manufacturer website	www.ledil.com
LED Halter B+W LED Holder B+W	4xx / Typ L8

e.g. solution with BROOKE-G2 reflector

4xx Type L8
(eg. 489 Type L8 for Tunable COBs)

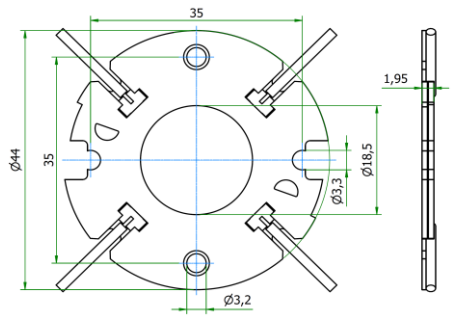

C16142 Hekla Socket K

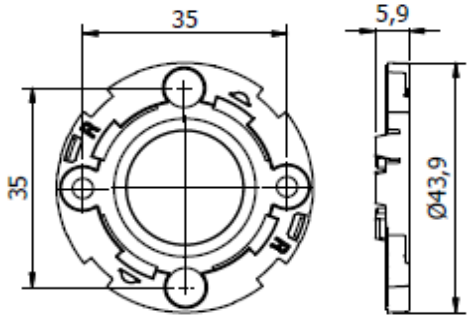

Mögliche Halter / COB Kombinationen / Holder / COB combinations LEDiL Hekla System

COB Hersteller COB Supplier	COB Typ COB Type	LES LES	Halter Holder	Adapter Base part
Bridgelux	V3 HD / V4 HD Gen 7,8	5 mm	460 Typ L8	C16142_HEKLA-SOCKET-K
Bridgelux	V6 HD Gen 7,8	7 mm	464 Typ L8	C16142_HEKLA-SOCKET-K
Bridgelux	V9 HD / V11 HD Gen 7,8	9 mm	496 Typ L8	C16142_HEKLA-SOCKET-K
Bridgelux	V6 Gen 8,9 (just 2 pads!)	9 mm	460 Typ L8	C16142_HEKLA-SOCKET-K
Bridgelux	V8 Gen 7,8,9 (4 pads)	9 mm	460 Typ L8	C16142_HEKLA-SOCKET-K
Bridgelux	V10 Gen 7,8,9	10 mm	486 Typ L8	C16142_HEKLA-SOCKET-K
Bridgelux	V13 Gen 7,8,9	15 mm	477 Typ L8	C16142_HEKLA-SOCKET-K
Bridgelux	V15 Gen 7,8,9	15 mm	456 Typ L8	C16142_HEKLA-SOCKET-K
Bridgelux	V18 Gen 7,8,9	20 mm	462 Typ L8	C16142_HEKLA-SOCKET-K
Bridgelux	Vesta DTW 6/9mm Gen 1,2	9 mm	490 Typ L8	C16142_HEKLA-SOCKET-K
Bridgelux	Vesta DTW 13/15mm Gen 1,2	16 mm	491 Typ L8	C16142_HEKLA-SOCKET-K
Bridgelux	Vesta DTW 18mm Gen 1	18 mm	505 Typ L8	C16142_HEKLA-SOCKET-K
Bridgelux	Vesta Tunable 6mm Gen 2	6 mm	504 Typ L8	C16142_HEKLA-SOCKET-K
Bridgelux	Vesta Tunable 9mm Gen 2	10 mm	489 Typ L8	C16142_HEKLA-SOCKET-K
Bridgelux	Vesta Tunable 13mm Gen 2	15 mm	492 Typ L8	C16142_HEKLA-SOCKET-K
Bridgelux	Vesta Tunable 15mm Gen 2	16 mm	482 Typ L8	C16142_HEKLA-SOCKET-K
Bridgelux	Vesta Tunable 18mm Gen 2	20 mm	483 Typ L8	C16142_HEKLA-SOCKET-K
Citizen	CLU 028 / 02J / 02Q	10 mm	434 Typ L8	C16142_HEKLA-SOCKET-K
Citizen	CLU 038 / 03H / 03J / 03Q	15 mm	433 Typ L8	C16142_HEKLA-SOCKET-K
Citizen	CLU 7L3 / 7S3	4 mm	467 Typ L8	C16142_HEKLA-SOCKET-K
Citizen	CLU 7R3	4 mm	485 Typ L8	C16142_HEKLA-SOCKET-K
Citizen	CLU 702 / 703 / 7A2 /7A3 / 7B2	6 mm	434 Typ L8	C16142_HEKLA-SOCKET-K
Citizen	CLU 712 / 713	9 mm	477 Typ L8	C16142_HEKLA-SOCKET-K
Citizen	CLU 723	11 mm	477 Typ L8	C16142_HEKLA-SOCKET-K
Citizen	LCN-C01B2 / C02B2 Tunable	15 mm	481 Typ L8	C16142_HEKLA-SOCKET-K
Citizen	LCN-C04B2 / C05B2 Tunable	15 mm	481 Typ L8	C16142_HEKLA-SOCKET-K
CREE	CHA 0304 / 0410 / 0612	3 mm	434 Typ L8	C16142_HEKLA-SOCKET-K
CREE	CHA 0825	9 mm	433 Typ L8	C16142_HEKLA-SOCKET-K
CREE	CMA 1303 / 1306	6 mm	448 Typ L8	C16142_HEKLA-SOCKET-K
CREE	CMA 1516	9 mm	441 Typ L8	C16142_HEKLA-SOCKET-K
CREE	CMA 1825 / 1840	14 mm	437 Typ L8	C16142_HEKLA-SOCKET-K
CREE	CMA 2550	19 mm	439 Typ L8	C16142_HEKLA-SOCKET-K
CREE	CMB 1304 / 1306	6 mm	448 Typ L8	C16142_HEKLA-SOCKET-K
CREE	CMB 1507 / 1510 / 1516	9 mm	441 Typ L8	C16142_HEKLA-SOCKET-K
CREE	CMB 1818 / 1825	12 mm	437 Typ L8	C16142_HEKLA-SOCKET-K

Mögliche Halter / COB Kombinationen / Holder / COB combinations LEDiL Hekla System

COB Hersteller COB Supplier	COB Typ COB Type	LES LES	Halter Holder	Adapter Base part
CREE	CMB 1840	14 mm	457 Typ L8	C16142_HEKLA-SOCKET-K
CREE	CMB 2550	19 mm	439 Typ L8	C16142_HEKLA-SOCKET-K
CREE	CMT 1407 / 1412 / 1420	10 mm	434 Typ L8	C16142_HEKLA-SOCKET-K
CREE	CMT 1922 / 1925 / 1930 / 1945	15 mm	477 Typ L8	C16142_HEKLA-SOCKET-K
CREE	CMU 1003 / 1006 / 1010 / 1013	10 mm	434 Typ L8	C16142_HEKLA-SOCKET-K
CREE	CMU 1516 / 1519 / 1526 / 1532	15 mm	433 Typ L8	C16142_HEKLA-SOCKET-K
CREE	CXB 1304 / 1310	6 mm	448 Typ L8	C16142_HEKLA-SOCKET-K
CREE	CXB 1507 / 1512 / 1520	9 mm	441 Typ L8	C16142_HEKLA-SOCKET-K
CREE	CXB 1816 / 1820	12 mm	437 Typ L8	C16142_HEKLA-SOCKET-K
CREE	CXB 1830	14 mm	457 Typ L8	C16142_HEKLA-SOCKET-K
CREE	CXB 2530 / 2540	19 mm	439 Typ L8	C16142_HEKLA-SOCKET-K
Edison	2PHE 03 / 06 / 09 / 13	10 mm	434 Typ L8	C16142_HEKLA-SOCKET-K
Edison	2PHE 15 / 18 / 24 / 30	16 mm	433 Typ L8	C16142_HEKLA-SOCKET-K
Lextar	PB 06 / 09 / 13	10 mm	434 Typ L8	C16142_HEKLA-SOCKET-K
Lextar	PB 16 / 19 / 26	15 mm	433 Typ L8	C16142_HEKLA-SOCKET-K
Lumileds	Luxeon 1202s / 1202HD	7 mm	452 Typ L8	C16142_HEKLA-SOCKET-K
Lumileds	Luxeon 1202 / 1203 / 1204HD	9 mm	480 Typ L8	C16142_HEKLA-SOCKET-K
Lumileds	Luxeon 1205HD	11 mm	480 Typ L8	C16142_HEKLA-SOCKET-K
Lumileds	Luxeon 1204 / 1205	13 mm	432 Typ L8	C16142_HEKLA-SOCKET-K
Lumileds	Luxeon 1208 / 1210	15 mm	432 Typ L8	C16142_HEKLA-SOCKET-K
Lumileds	CS COB L02 / L04	10 mm	434 Typ L8	C16142_HEKLA-SOCKET-K
Lumileds	CS COB L06 / L08 / L10	15 mm	433 Typ L8	C16142_HEKLA-SOCKET-K
Lumileds	CX Plus HD S01H4, S0xH6	6 mm	448 Typ L8	C16142_HEKLA-SOCKET-K
Lumileds	CX Plus HD S04H9	9 mm	4xx Typ L8	C16142_HEKLA-SOCKET-K
Lumileds	CX Plus S01Fx / S02Fx	5 mm	448 Typ L8	C16142_HEKLA-SOCKET-K
Lumileds	CX Plus M02Fx / M03Fx	9 mm	441 Typ L8	C16142_HEKLA-SOCKET-K
Lumileds	CX Plus L04Fx / L05Fx / L08Fx	14 mm	437 Typ L8	C16142_HEKLA-SOCKET-K
Luminus	CXM-3-xC	4 mm	434 Typ L8	C16142_HEKLA-SOCKET-K
Luminus	CHM-4-BH / CXM-4-xC	5 mm	434 Typ L8	C16142_HEKLA-SOCKET-K
Luminus	CHM-6-BH / CXM-6-xC	6 mm	434 Typ L8	C16142_HEKLA-SOCKET-K
Luminus	CIM/CLM/CXM-9-xC	9 mm	434 Typ L8	C16142_HEKLA-SOCKET-K
Luminus	CLM/CXM-9-xA	10 mm	461 Typ L8	C16142_HEKLA-SOCKET-K
Luminus	CHM-9-BH	9 mm	433 Typ L8	C16142_HEKLA-SOCKET-K

Mögliche Halter / COB Kombinationen / Holder / COB combinations LEDiL Hekla System

COB Hersteller COB Supplier	COB Typ COB Type	LES LES	Halter Holder	Adapter Base part
Luminus	CXM-11-xC	12 mm	433 Typ L8	C16142_HEKLA-SOCKET-K
Luminus	CGM/CIM/CLM/CXM-14-xC	15 mm	433 Typ L8	C16142_HEKLA-SOCKET-K
Luminus	CVM/CXM-18	18 mm	453 Typ L8	C16142_HEKLA-SOCKET-K
Luminus	CDM-6 / CDM-9Gen1 DtW	10 mm	490 Typ L8	C16142_HEKLA-SOCKET-K
Luminus	CDM-9 Gen2 DtW	9 mm	491 Typ L8	C16142_HEKLA-SOCKET-K
Luminus	CDM-14/CDM-18 DtW	17 mm	491 Typ L8	C16142_HEKLA-SOCKET-K
Luminus	CTM-6 / CTM-9 TW	10 mm	495 Typ L8	C16142_HEKLA-SOCKET-K
Luminus	CTM-14 TW	18 mm	442 Typ L8	C16142_HEKLA-SOCKET-K
Luminus	CTM-14 RGBW	14 mm	500 Typ L8	C16142_HEKLA-SOCKET-K
Luminus	CTM-18 Gen1 TW	18 mm	442 Typ L8	C16142_HEKLA-SOCKET-K
Luminus	CTM-18 Gen2 TW	20 mm	483 Typ L8	C16142_HEKLA-SOCKET-K
Luxtech	COB-WD-10-1512	8 mm	479 Typ L8	C16142_HEKLA-SOCKET-K
Luxtech	COB-WD-17-2420	15 mm	491 Typ L8	C16142_HEKLA-SOCKET-K
Luxtech	COB-DN-16-2420	15 mm	442 Typ L8	C16142_HEKLA-SOCKET-K
Nichia	NV..S007Z / NF..T012B	7,0 mm	452 Typ L8	C16142_HEKLA-SOCKET-K
Nichia	NF..S024B / NT..S024B	7,0 mm	452 Typ L8	C16142_HEKLA-SOCKET-K
Nichia	NJ..S024Z	7,0 mm	452 Typ L8	C16142_HEKLA-SOCKET-K
Nichia	NV..L016Z / NV..L024Z	8,9 mm	438 Typ L8	C16142_HEKLA-SOCKET-K
Nichia	NF..L036B / NF..L048B	11,5 mm	438 Typ L8	C16142_HEKLA-SOCKET-K
Nichia	NF..L060B	11,5 mm	438 Typ L8	C16142_HEKLA-SOCKET-K
Nichia	NV..J048Z / NF..J108B	14,6 mm	463 Typ L8	C16142_HEKLA-SOCKET-K
Nichia	NF..J130B	14,6 mm	463 Typ L8	C16142_HEKLA-SOCKET-K
Nichia	NJNWS012Z Tunable	5,9 mm	495 Typ L8 HV	C16142_HEKLA-SOCKET-K
Nichia	NJCWL024Z Tunable	7,0 mm	497 Typ L8 HV	C16142_HEKLA-SOCKET-K
Nichia	NVCWJ024Z Tunable	11,0 mm	498 Typ L8 HV	C16142_HEKLA-SOCKET-K
Philips	Fortimo SLM12xx .. 1215 G7	6,5 mm	452 Typ L8	C16142_HEKLA-SOCKET-K
Philips	Fortimo SLM12xx .. 1619 G7	9,0 mm	480 Typ L8	C16142_HEKLA-SOCKET-K
Philips	Fortimo SLM12xx .. 2024 G7	15,0 mm	432 Typ L8	C16142_HEKLA-SOCKET-K
Philips	Fortimo SLM12xx .. 1313 G7N	9,8 mm	434 Typ L8	C16142_HEKLA-SOCKET-K
Philips	Fortimo SLM12xx .. 1919 G7N	14,5 mm	433 Typ L8	C16142_HEKLA-SOCKET-K
Philips	Fortimo SLM13xx .. 2024 G8 UHE	15,0 mm	432 Typ L8	C16142_HEKLA-SOCKET-K
Philips	Fortimo L06A 1313 G7N Tunable	6,5 mm	509 Typ L8	C16142_HEKLA-SOCKET-K
Philips	Fortimo L09A 1919 G7N Tunable	9,3 mm	501 Typ L8	C16142_HEKLA-SOCKET-K

Mögliche Halter / COB Kombinationen / Holder / COB combinations **LEDiL Hekla System**

COB Hersteller COB Supplier	COB Typ COB Type	LES LES	Halter Holder	Adapter Base part
Prolight Opto	PASB	9,8 mm	434 Typ L8	C16142_HEKLA-SOCKET-K
Prolight Opto	PASQ/PAPQ DimToWarm	9,8 mm	434 Typ L8	C16142_HEKLA-SOCKET-K
Prolight Opto	PDSQ DimToWarm	8,0 mm	490 Typ L8	C16142_HEKLA-SOCKET-K
Prolight Opto	PDSR DimToWarm	15,0 mm	432 Typ L8	C16142_HEKLA-SOCKET-K
Prolight Opto	PDSJ Tunable	15,0 mm	442 Typ L8	C16142_HEKLA-SOCKET-K
Samsung	LC 010C	6,0 mm	434 Typ L8	C16142_HEKLA-SOCKET-K
Samsung	LC 020C / 030C / 040C	11,5 mm	477 Typ L8	C16142_HEKLA-SOCKET-K
Samsung	LC 003D / 006D	9,8 mm	434 Typ L8	C16142_HEKLA-SOCKET-K
Samsung	LC 009D / 013D	9,8 mm	434 Typ L8	C16142_HEKLA-SOCKET-K
Samsung	LC 016D / 019D	15,5 mm	477 Typ L8	C16142_HEKLA-SOCKET-K
Samsung	LC 026D / 033D	15,5 mm	477 Typ L8	C16142_HEKLA-SOCKET-K
Samsung	LC010T Tunable	9,8 mm	501 Typ L8	C16142_HEKLA-SOCKET-K
Samsung	LC020T Tunable	13,0 mm	501 Typ L8	C16142_HEKLA-SOCKET-K
Seoul	SAW* 0661	6,0 mm	434 Typ L8	C16142_HEKLA-SOCKET-K
Seoul	SAW* 1062 / 1063	9,8 mm	434 Typ L8	C16142_HEKLA-SOCKET-K
Seoul	SAW* 1564 / 1565 / 1566	14,5 mm	477 Typ L8	C16142_HEKLA-SOCKET-K
Tridonic	SLE ADV8 LES 04 / 06	9,0 mm	434 Typ L8	C16142_HEKLA-SOCKET-K
Tridonic	SLE ADV8 LES 09	9,0 mm	434 Typ L8	C16142_HEKLA-SOCKET-K
Tridonic	SLE ADV8 LES 13	13,0 mm	433 Typ L8	C16142_HEKLA-SOCKET-K
Tridonic	SLE ADV8 LES 15	15,0 mm	433 Typ L8	C16142_HEKLA-SOCKET-K
Tridonic	SLE SNC8 LES 06	6,0 mm	434 Typ L8	C16142_HEKLA-SOCKET-K
Tridonic	SLE SNC8 LES 09	9,8 mm	434 Typ L8	C16142_HEKLA-SOCKET-K
Tridonic	SLE SNC8 LES 15	14,5 mm	433 Typ L8	C16142_HEKLA-SOCKET-K
VS Lighting	DMS 102 ***W	6,0 mm	434 Typ L8	C16142_HEKLA-SOCKET-K
VS Lighting	DMS 124 ***W	9,0 mm	434 Typ L8	C16142_HEKLA-SOCKET-K
VS Lighting	DMS 125 / 126 / 128 ***W	13,8 mm	433 Typ L8	C16142_HEKLA-SOCKET-K
VS Lighting	DMS 1208J	14,5 mm	433 Typ L8	C16142_HEKLA-SOCKET-K
VS Lighting	VCA 042	3,9 mm	486 Typ L8	C16142_HEKLA-SOCKET-K
VS Lighting	VCA2 122 / 123 / 124	9,1 mm	486 Typ L8	C16142_HEKLA-SOCKET-K
VS Lighting	VCA2 126 / 128	13,8 mm	477 Typ L8	C16142_HEKLA-SOCKET-K
VS Lighting	TW 1914 Tunable	13,8 mm	493 Typ L8	C16142_HEKLA-SOCKET-K
VS Lighting	WU-M-618 DimToWarm	9,8 mm	434 Typ L8	C16142_HEKLA-SOCKET-K

Mögliche Halter / COB Kombinationen / Holder / COB combinations LEDiL Hekla System

COB Hersteller COB Supplier	COB Typ COB Type	LES LES	Halter Holder	Adapter Base part
Xicato	XOB 04	4,5 mm	486 Typ L8	C16142_HEKLA-SOCKET-K
Xicato	XOB 06 (B)	6,0 mm	486 Typ L8	C16142_HEKLA-SOCKET-K
Xicato	XOB 09	9,8 mm	434 Typ L8	C16142_HEKLA-SOCKET-K
Xicato	XOB 14	14,5 mm	433 Typ L8	C16142_HEKLA-SOCKET-K

LEDiL®

LENA
LENINA

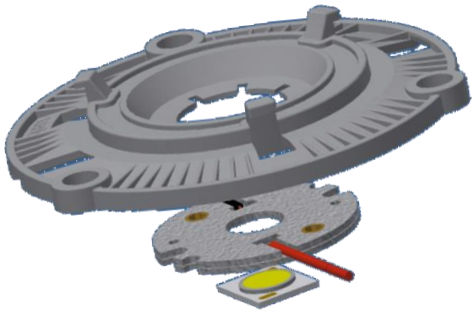

LEDiL Adapter LEDiL adaptor	C13868_LENA-STD-BASE-VERO13-18 C13867_LENA-STD-BASE-VERO29
Hersteller Webseite Manufacturer website	www.ledil.com
LED Halter B+W LED Holder B+W	4xx / Typ L1 4xx / Typ L2 4xx / Typ L3

4xx Typ L1

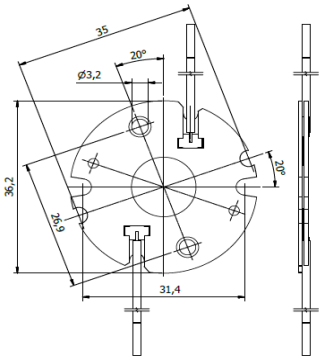

4xx Typ L2

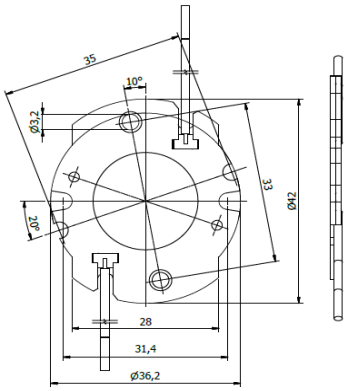

C13868_LENA-STD-BASE-VERO13-18

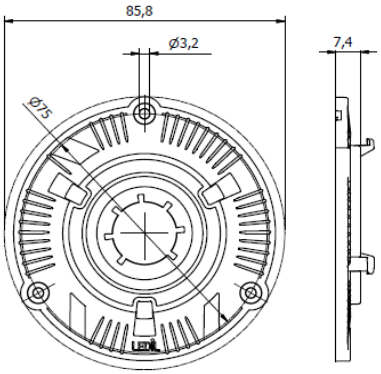

4xx Typ L3

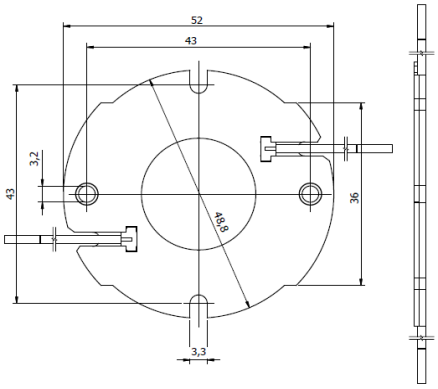

C13867_LENA-STD-BASE-VERO29

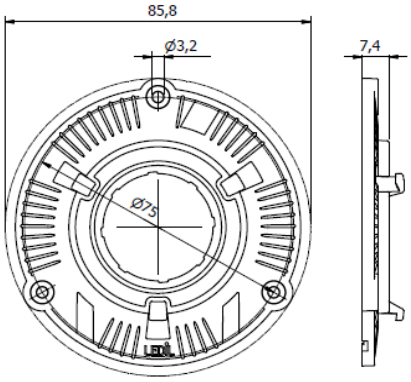

Mögliche Halter / COB Kombinationen / Holder / COB combinations LEDiL Lena

COB Hersteller COB Supplier	COB Typ COB Type	Halter Holder	Adapter Base part
Bridgelux	**V10 Gen 7,8,9**	**486 Typ L1**	**C13868_LENA-STD-BASE-VERO13-18**
Bridgelux	**V13 Gen 7,8,9**	**477 Typ L1**	**C13868_LENA-STD-BASE-VERO13-18**
Bridgelux	**V15 Gen 7,8,9**	**456 Typ L2**	**C13868_LENA-STD-BASE-VERO13-18**
Bridgelux	**V18 Gen 7,8,9**	**462 Typ L3**	**C13867_LENA-STD-BASE-VERO29**
Bridgelux	**V22 Gen 7,8,9**	**431 Typ L3**	**C13867_LENA-STD-BASE-VERO29**

Mögliche Halter / COB Kombinationen / Holder / COB combinations LEDiL Lena

COB Hersteller COB Supplier	COB Typ COB Type	Halter Holder	Adapter Base part
Bridgelux	Vesta DTW 13/15mm Gen 1,2	491 Typ L2	C13868_LENA-STD-BASE-VERO13-18
Bridgelux	Vesta DTW 18mm Gen 1	505 Typ L3	C13867_LENA-STD-BASE-VERO29
Bridgelux	Vesta Tunable 13mm Gen 2	492 Typ L1	C13868_LENA-STD-BASE-VERO13-18
Bridgelux	Vesta Tunable 15mm Gen 2	482 Typ L2	C13868_LENA-STD-BASE-VERO13-18
Bridgelux	Vesta Tunable 18mm Gen 2	483 Typ L3	C13867_LENA-STD-BASE-VERO29
Bridgelux	Vesta Tunable 22mm Gen 2	494 Typ L3	C13867_LENA-STD-BASE-VERO29
Citizen	CLU 028 / 02J / 02Q	434 Typ L1	C13868_LENA-STD-BASE-VERO13-18
Citizen	CLU 038 / 03H / 03J / 03Q	433 Typ L1	C13868_LENA-STD-BASE-VERO13-18
Citizen	CLU 048 / 04H / 04J / 04Q	431 Typ L3	C13867_LENA-STD-BASE-VERO29
Citizen	CLU 723	477 Typ L1	C13868_LENA-STD-BASE-VERO13-18
Citizen	CLU 733	471 Typ L3	C13867_LENA-STD-BASE-VERO29
Citizen	LCN-C01B2 / C02B2 Tunable	481 Typ L2	C13868_LENA-STD-BASE-VERO13-18
Citizen	LCN-C04B2 / C05B2 Tunable	481 Typ L2	C13868_LENA-STD-BASE-VERO13-18
CREE	CMA 1825 / 1840	437 Typ L1	C13868_LENA-STD-BASE-VERO13-18
CREE	CMA 2550	439 Typ L3	C13867_LENA-STD-BASE-VERO29
CREE	CMA 3090	447 Typ L3	C13867_LENA-STD-BASE-VERO29
CREE	CMB 1818 / 1825	437 Typ L1	C13868_LENA-STD-BASE-VERO13-18
CREE	CMB 1840	457 Typ L1	C13868_LENA-STD-BASE-VERO13-18
CREE	CMB 2550	439 Typ L3	C13867_LENA-STD-BASE-VERO29
CREE	CMB 3090	447 Typ L3	C13867_LENA-STD-BASE-VERO29
CREE	CMT 1407 / 1412 / 1420	434 Typ L1	C13868_LENA-STD-BASE-VERO13-18
CREE	CMT 1922 / 1925 / 1930 / 1945	477 Typ L1	C13868_LENA-STD-BASE-VERO13-18
CREE	CMT 2850 / 2870 / 2890	471 Typ L3	C13867_LENA-STD-BASE-VERO29
CREE	CMU 1003 / 1006 / 1010 / 1013	434 Typ L1	C13868_LENA-STD-BASE-VERO13-18
CREE	CMU 1516 / 1519 / 1526 / 1532	433 Typ L1	C13868_LENA-STD-BASE-VERO13-18
CREE	CMU 2236 / 2239 / 2258 / 2287	471 Typ L3	C13867_LENA-STD-BASE-VERO29
CREE	CXB 1816 / 1820	437 Typ L1	C13868_LENA-STD-BASE-VERO13-18
CREE	CXB 1830	457 Typ L1	C13868_LENA-STD-BASE-VERO13-18
CREE	CXB 2530 / 2540	439 Typ L3	C13867_LENA-STD-BASE-VERO29
CREE	CXB 3050 / 3070	447 Typ L3	C13867_LENA-STD-BASE-VERO29
Edison	2PHE 03 / 06 / 09 / 13	434 Typ L1	C13868_LENA-STD-BASE-VERO13-18
Edison	2PHE 15 / 18 / 24 / 30	433 Typ L1	C13868_LENA-STD-BASE-VERO13-18
Edison	2PHE 55 / 60 / 83	431 Typ L3	C13867_LENA-STD-BASE-VERO29

Mögliche Halter / COB Kombinationen / Holder / COB combinations LEDiL Lena

COB Hersteller COB Supplier	COB Typ COB Type	Halter Holder	Adapter Base part
Lextar	PB 06 / 09 / 13	434 Typ L1	C13868_LENA-STD-BASE-VERO13-18
Lextar	PB 16 / 19 / 26	433 Typ L1	C13868_LENA-STD-BASE-VERO13-18
Lextar	PB 38 / 54	431 Typ L3	C13867_LENA-STD-BASE-VERO29
Lumileds	Luxeon 1205HD	480 Typ L1	C13868_LENA-STD-BASE-VERO13-18
Lumileds	Luxeon 1204 / 1205	432 Typ L2	C13868_LENA-STD-BASE-VERO13-18
Lumileds	Luxeon 1208 / 1210	432 Typ L2	C13868_LENA-STD-BASE-VERO13-18
Lumileds	Luxeon 1211	431 Typ L3	C13867_LENA-STD-BASE-VERO29
Lumileds	Luxeon 1213 / 1216 / 1812 / 1816	431 Typ L3	C13867_LENA-STD-BASE-VERO29
Lumileds	CS COB L02 / L04	434 Typ L1	C13868_LENA-STD-BASE-VERO13-18
Lumileds	CS COB L06 / L08 / L10	433 Typ L1	C13868_LENA-STD-BASE-VERO13-18
Lumileds	CS COB L11 / L13 / L16	431 Typ L3	C13867_LENA-STD-BASE-VERO29
Lumileds	CS COB R12 / R18	431 Typ L3	C13867_LENA-STD-BASE-VERO29
Lumileds	CX Plus L04Fx / L05Fx / L08Fx	437 Typ L1	C13868_LENA-STD-BASE-VERO13-18
Luminus	CXM-11-xC	433 Typ L1	C13868_LENA-STD-BASE-VERO13-18
Luminus	CGM/CIM/CLM/CXM-14-xC	433 Typ L1	C13868_LENA-STD-BASE-VERO13-18
Luminus	CVM/CXM-18	453 Typ L2	C13868_LENA-STD-BASE-VERO13-18
Luminus	CXM-18 Gen6	431 Typ L3	C13867_LENA-STD-BASE-VERO29
Luminus	CGM/CIM/CLM/CXM-22-xC	431 Typ L3	C13867_LENA-STD-BASE-VERO29
Luminus	CDM-14/CDM-18 DtW	491 Typ L2	C13868_LENA-STD-BASE-VERO13-18
Luminus	CTM-14 TW	442 Typ L2	C13868_LENA-STD-BASE-VERO13-18
Luminus	CTM-18 Gen1 TW	442 Typ L2	C13868_LENA-STD-BASE-VERO13-18
Luminus	CTM-18 Gen2 TW	483 Typ L3	C13867_LENA-STD-BASE-VERO29
Luminus	CTM-22 TW	494 Typ L3	C13867_LENA-STD-BASE-VERO29
Luxtech	COB-WD-17-2420	491 Typ L2	C13868_LENA-STD-BASE-VERO13-18
Nichia	NF..L036B / NF..L048B	438 Typ L1	C13868_LENA-STD-BASE-VERO13-18
Nichia	NF..L060B	438 Typ L1	C13868_LENA-STD-BASE-VERO13-18
Nichia	NV..J048Z / NF..J108B	463 Typ L2	C13868_LENA-STD-BASE-VERO13-18
Nichia	NF..J130B	463 Typ L2	C13868_LENA-STD-BASE-VERO13-18
Nichia	NVCWJ024Z Tunable	498 Typ L2 HV	C13868_LENA-STD-BASE-VERO13-18
Philips	Fortimo SLM12xx .. 2024 G7	432 Typ L2	C13868_LENA-STD-BASE-VERO13-18
Philips	Fortimo SLM12xx .. 2828 G7	431 Typ L3	C13867_LENA-STD-BASE-VERO29
Philips	Fortimo SLM12xx .. 1313 G7N	434 Typ L1	C13868_LENA-STD-BASE-VERO13-18

Mögliche Halter / COB Kombinationen / Holder / COB combinations LEDiL Lena

COB Hersteller COB Supplier	COB Typ COB Type	Halter Holder	Adapter Base part
Philips	Fortimo SLM12xx .. 1919 G7N	433 Typ L1	C13868_LENA-STD-BASE-VERO13-18
Philips	Fortimo SLM12xx .. 2828 G7N	431 Typ L3	C13867_LENA-STD-BASE-VERO29
Philips	Fortimo SLM13xx .. 2024 G8 UHE	432 Typ L2	C13868_LENA-STD-BASE-VERO13-18
Philips	Fortimo SLM13xx .. 2828 G8 UHE	431 Typ L3	C13867_LENA-STD-BASE-VERO29
Prolight Opto	PASB	434 Typ L1	C13868_LENA-STD-BASE-VERO13-18
Prolight Opto	PASQ/PAPQ DimToWarm	434 Typ L1	C13868_LENA-STD-BASE-VERO13-18
Prolight Opto	PDSR DimToWarm	432 Typ L2	C13868_LENA-STD-BASE-VERO13-18
Samsung	LC 020C / 030C / 040C	477 Typ L1	C13868_LENA-STD-BASE-VERO13-18
Samsung	LC 003D / 006D	434 Typ L1	C13868_LENA-STD-BASE-VERO13-18
Samsung	LC 009D / 013D	434 Typ L1	C13868_LENA-STD-BASE-VERO13-18
Samsung	LC 016D / 019D	477 Typ L1	C13868_LENA-STD-BASE-VERO13-18
Samsung	LC 026D / 033D	477 Typ L1	C13868_LENA-STD-BASE-VERO13-18
Samsung	LC 040D / 060D / 080D	431 Typ L3	C13867_LENA-STD-BASE-VERO29
Samsung	LC010T Tunable	501 Typ L1	C13868_LENA-STD-BASE-VERO13-18
Samsung	LC020T Tunable	501 Typ L1	C13868_LENA-STD-BASE-VERO13-18
Samsung	LC035T Tunable	502 Typ L3	C13867_LENA-STD-BASE-VERO29
Seoul	SAW* 1062 / 1063	434 Typ L1	C13868_LENA-STD-BASE-VERO13-18
Seoul	SAW* 1564 / 1565 / 1566	477 Typ L1	C13868_LENA-STD-BASE-VERO13-18
Seoul	SAW* 22AA / 2296	431 Typ L3	C13867_LENA-STD-BASE-VERO29
Seoul	SAW* 2298 / 226A	431 Typ L3	C13867_LENA-STD-BASE-VERO29
Tridonic	SLE ADV8 LES 13	433 Typ L1	C13868_LENA-STD-BASE-VERO13-18
Tridonic	SLE ADV8 LES 15	433 Typ L1	C13868_LENA-STD-BASE-VERO13-18
Tridonic	SLE ADV8 LES 17	431 Typ L3	C13867_LENA-STD-BASE-VERO29
Tridonic	SLE ADV8 LES 21	431 Typ L3	C13867_LENA-STD-BASE-VERO29
Tridonic	SLE SNC8 LES 09	434 Typ L1	C13868_LENA-STD-BASE-VERO13-18
Tridonic	SLE SNC8 LES 15	433 Typ L1	C13868_LENA-STD-BASE-VERO13-18
VS Lighting	DMS 125 / 126 / 128 ***W	433 Typ L1	C13868_LENA-STD-BASE-VERO13-18
VS Lighting	DMS 120 ***W	431 Typ L3	C13867_LENA-STD-BASE-VERO29
VS Lighting	DMS 12C / 18B ***W	431 Typ L3	C13867_LENA-STD-BASE-VERO29
VS Lighting	DMS 1208J	433 Typ L1	C13868_LENA-STD-BASE-VERO13-18
VS Lighting	DMS 1212J / 1812J	431 Typ L3	C13867_LENA-STD-BASE-VERO29
VS Lighting	VCA2 126 / 128	477 Typ L1	C13868_LENA-STD-BASE-VERO13-18

Mögliche Halter / COB Kombinationen / Holder / COB combinations LEDiL Lena

COB Hersteller COB Supplier	COB Typ COB Type	Halter Holder	Adapter Base part
VS Lighting	VCA2 1211 / 1213	471 Typ L3	C13867_LENA-STD-BASE-VERO29
VS Lighting	TW 1914 Tunable	493 Typ L1	C13868_LENA-STD-BASE-VERO13-18
VS Lighting	TW 2820 Tunable	494 Typ L3	C13867_LENA-STD-BASE-VERO29
VS Lighting	WU-M-618 DimToWarm	434 Typ L1	C13868_LENA-STD-BASE-VERO13-18
Xicato	XOB 09	434 Typ L1	C13868_LENA-STD-BASE-VERO13-18
Xicato	XOB 14	433 Typ L1	C13868_LENA-STD-BASE-VERO13-18
Xicato	XOB 23	431 Typ L3	C13867_LENA-STD-BASE-VERO29

LEDiL®

PF-SOCKET SYSTEM

Passende LEDiL Optik Suitable LEDiL optics	**BARBARA** **MIRELLA**
LEDiL Adapter LEDiL adaptor	C13709_PF-SOCKET-VERO13-18
Hersteller Webseite Manufacturer website	www.ledil.com
LED Halter B+W LED Holder B+W	4xx / Typ L1 4xx / Typ L2

MIRELLA
LES: max 14,5mm

BARBARA
LES: max 14,5mm

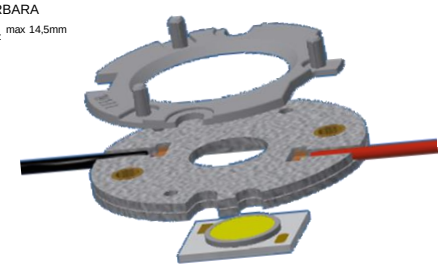

Für BARBARA-G2 und MIRELLA-G2 ist die passende Lösung unter LEDiL HEKLA aufgeführt
Take care that BARBARA-G2 and MIRELLA-G2 requieres a different solution available under LEDiL HEKLA

4xx Typ L1

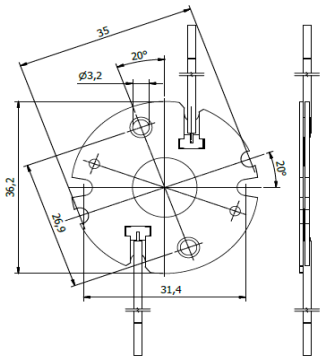

4xx Typ L2

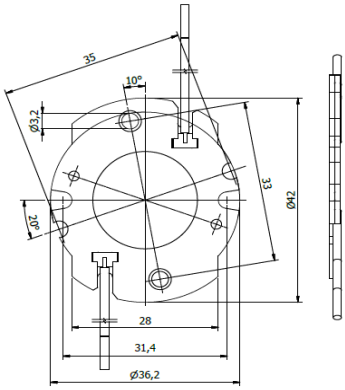

C13709_PF-SOCKET-VERO13-18

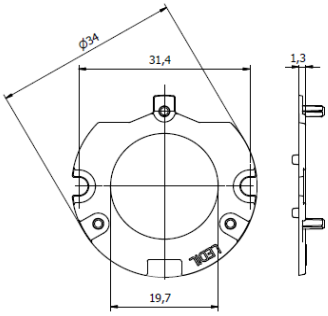

Mögliche Halter / COB Kombinationen / Holder / COB combinations LEDiL PF-Socket

COB Hersteller COB Supplier	COB Typ COB Type	LES LES	Halter Holder	Adapter Base part
Bridgelux	V3 HD / V4 HD Gen 7,8	5 mm	460 Typ L1	C13709_PF-SOCKET-VERO13-18
Bridgelux	V6 HD Gen 7,8	7 mm	464 Typ L1	C13709_PF-SOCKET-VERO13-18
Bridgelux	V9 HD / V11 HD Gen 7,8	9 mm	496 Typ L1	C13709_PF-SOCKET-VERO13-18
Bridgelux	V6 Gen 8,9 (just 2 pads!)	9 mm	460 Typ L1	C13709_PF-SOCKET-VERO13-18
Bridgelux	V8 Gen 7,8,9 (4 pads)	9 mm	460 Typ L1	C13709_PF-SOCKET-VERO13-18
Bridgelux	V10 Gen 7,8,9	10 mm	486 Typ L1	C13709_PF-SOCKET-VERO13-18
Bridgelux	V13 Gen 7,8,9	15 mm	477 Typ L1	C13709_PF-SOCKET-VERO13-18
Bridgelux	V15 Gen 7,8,9	15 mm	456 Typ L2	C13709_PF-SOCKET-VERO13-18

Mögliche Halter / COB Kombinationen / Holder / COB combinations LEDiL PF-Socket

COB Hersteller COB Supplier	COB Typ COB Type	LES LES	Halter Holder	Adapter Base part
Bridgelux	Vesta DTW 6/9mm Gen 1,2	9 mm	490 Typ L1	C13709_PF-SOCKET-VERO13-18
Bridgelux	Vesta DTW 13/15mm Gen 1,2	16 mm	491 Typ L2	C13709_PF-SOCKET-VERO13-18
Bridgelux	Vesta Tunable 6mm Gen 2	6 mm	504 Typ L1	C13709_PF-SOCKET-VERO13-18
Bridgelux	Vesta Tunable 9mm Gen 2	10 mm	489 Typ L1	C13709_PF-SOCKET-VERO13-18
Bridgelux	Vesta Tunable 13mm Gen 2	15 mm	492 Typ L1	C13709_PF-SOCKET-VERO13-18
Bridgelux	Vesta Tunable 15mm Gen 2	16 mm	482 Typ L2	C13709_PF-SOCKET-VERO13-18
Citizen	CLU 028 / 02J / 02Q	10 mm	434 Typ L1	C13709_PF-SOCKET-VERO13-18
Citizen	CLU 038 / 03H / 03J / 03Q	15 mm	433 Typ L1	C13709_PF-SOCKET-VERO13-18
Citizen	CLU 7L3 / 7S3	4 mm	467 Typ L1	C13709_PF-SOCKET-VERO13-18
Citizen	CLU 7R3	4 mm	485 Typ L1	C13709_PF-SOCKET-VERO13-18
Citizen	CLU 702 / 703 / 7A2 /7A3 / 7B2	6 mm	434 Typ L1	C13709_PF-SOCKET-VERO13-18
Citizen	CLU 712 / 713	9 mm	477 Typ L1	C13709_PF-SOCKET-VERO13-18
Citizen	CLU 723	11 mm	477 Typ L1	C13709_PF-SOCKET-VERO13-18
Citizen	LCN-C01B2 / C02B2 Tunable	15 mm	481 Typ L2	C13709_PF-SOCKET-VERO13-18
Citizen	LCN-C04B2 / C05B2 Tunable	15 mm	481 Typ L2	C13709_PF-SOCKET-VERO13-18
CREE	CHA 0304 / 0410 / 0612	3 mm	434 Typ L1	C13709_PF-SOCKET-VERO13-18
CREE	CHA 0825	9 mm	433 Typ L1	C13709_PF-SOCKET-VERO13-18
CREE	CMA 1303 / 1306	6 mm	448 Typ L1	C13709_PF-SOCKET-VERO13-18
CREE	CMA 1516	9 mm	441 Typ L1	C13709_PF-SOCKET-VERO13-18
CREE	CMA 1825 / 1840	14 mm	437 Typ L1	C13709_PF-SOCKET-VERO13-18
CREE	CMB 1304 / 1306	6 mm	448 Typ L1	C13709_PF-SOCKET-VERO13-18
CREE	CMB 1507 / 1510 / 1516	9 mm	441 Typ L1	C13709_PF-SOCKET-VERO13-18
CREE	CMB 1818 / 1825	12 mm	437 Typ L1	C13709_PF-SOCKET-VERO13-18
CREE	CMB 1840	14 mm	457 Typ L1	C13709_PF-SOCKET-VERO13-18
CREE	CMT 1407 / 1412 / 1420	10 mm	434 Typ L1	C13709_PF-SOCKET-VERO13-18
CREE	CMT 1922 / 1925 / 1930 / 1945	15 mm	477 Typ L1	C13709_PF-SOCKET-VERO13-18
CREE	CMU 1003 / 1006 / 1010 / 1013	10 mm	434 Typ L1	C13709_PF-SOCKET-VERO13-18
CREE	CMU 1516 / 1519 / 1526 / 1532	15 mm	433 Typ L1	C13709_PF-SOCKET-VERO13-18
CREE	CXB 1304 / 1310	6 mm	448 Typ L1	C13709_PF-SOCKET-VERO13-18
CREE	CXB 1507 / 1512 / 1520	9 mm	441 Typ L1	C13709_PF-SOCKET-VERO13-18
CREE	CXB 1816 / 1820	12 mm	437 Typ L1	C13709_PF-SOCKET-VERO13-18
CREE	CXB 1830	14 mm	457 Typ L1	C13709_PF-SOCKET-VERO13-18
Edison	2PHE 03 / 06 / 09 / 13	10 mm	434 Typ L1	C13709_PF-SOCKET-VERO13-18
Edison	2PHE 15 / 18 / 24 / 30	16 mm	433 Typ L1	C13709_PF-SOCKET-VERO13-18

Mögliche Halter / COB Kombinationen / Holder / COB combinations LEDiL PF-Socket

COB Hersteller COB Supplier	COB Typ COB Type	LES LES	Halter Holder	Adapter Base part
Lextar	PB 06 / 09 / 13	10 mm	434 Typ L1	C13709_PF-SOCKET-VERO13-18
Lextar	PB 16 / 19 / 26	15 mm	433 Typ L1	C13709_PF-SOCKET-VERO13-18
Lumileds	Luxeon 1202s / 1202HD	7 mm	452 Typ L1	C13709_PF-SOCKET-VERO13-18
Lumileds	Luxeon 1202 / 1203 / 1204HD	9 mm	480 Typ L1	C13709_PF-SOCKET-VERO13-18
Lumileds	Luxeon 1205HD	11 mm	480 Typ L1	C13709_PF-SOCKET-VERO13-18
Lumileds	Luxeon 1204 / 1205	13 mm	432 Typ L2	C13709_PF-SOCKET-VERO13-18
Lumileds	Luxeon 1208 / 1210	15 mm	432 Typ L2	C13709_PF-SOCKET-VERO13-18
Lumileds	CS COB L02 / L04	10 mm	434 Typ L1	C13709_PF-SOCKET-VERO13-18
Lumileds	CS COB L06 / L08 / L10	15 mm	433 Typ L1	C13709_PF-SOCKET-VERO13-18
Lumileds	CX Plus HD S01H4, S0xH6	6 mm	448 Typ L1	C13709_PF-SOCKET-VERO13-18
Lumileds	CX Plus HD S04H9	9 mm	4xx Typ L1	C13709_PF-SOCKET-VERO13-18
Lumileds	CX Plus S01Fx / S02Fx	5 mm	448 Typ L1	C13709_PF-SOCKET-VERO13-18
Lumileds	CX Plus M02Fx / M03Fx	9 mm	441 Typ L1	C13709_PF-SOCKET-VERO13-18
Lumileds	CX Plus L04Fx / L05Fx / L08Fx	14 mm	437 Typ L1	C13709_PF-SOCKET-VERO13-18
Luminus	CXM-3-xC	4 mm	434 Typ L1	C13709_PF-SOCKET-VERO13-18
Luminus	CHM-4-BH / CXM-4-xC	5 mm	434 Typ L1	C13709_PF-SOCKET-VERO13-18
Luminus	CHM-6-BH / CXM-6-xC	6 mm	434 Typ L1	C13709_PF-SOCKET-VERO13-18
Luminus	CIM/CLM/CXM-9-xC	9 mm	434 Typ L1	C13709_PF-SOCKET-VERO13-18
Luminus	CLM/CXM-9-xA	10 mm	461 Typ L1	C13709_PF-SOCKET-VERO13-18
Luminus	CHM-9-BH	9 mm	433 Typ L1	C13709_PF-SOCKET-VERO13-18
Luminus	CXM-11-xC	12 mm	433 Typ L1	C13709_PF-SOCKET-VERO13-18
Luminus	CGM/CIM/CLM/CXM-14-xC	15 mm	433 Typ L1	C13709_PF-SOCKET-VERO13-18
Luminus	CVM/CXM-18	18 mm	453 Typ L2	C13709_PF-SOCKET-VERO13-18
Luminus	CDM-6 / CDM-9Gen1 DtW	10 mm	490 Typ L1	C13709_PF-SOCKET-VERO13-18
Luminus	CDM-9 Gen2 DtW	9 mm	491 Typ L2	C13709_PF-SOCKET-VERO13-18
Luminus	CDM-14/CDM-18 DtW	17 mm	491 Typ L2	C13709_PF-SOCKET-VERO13-18
Luminus	CTM-6 / CTM-9 TW	10 mm	495 Typ L1	C13709_PF-SOCKET-VERO13-18
Luminus	CTM-14 TW	18 mm	442 Typ L2	C13709_PF-SOCKET-VERO13-18
Luminus	CTM-18 Gen1 TW	18 mm	442 Typ L2	C13709_PF-SOCKET-VERO13-18
Luxtech	COB-WD-10-1512	8 mm	479 Typ L1	C13709_PF-SOCKET-VERO13-18
Luxtech	COB-WD-17-2420	15 mm	491 Typ L2	C13709_PF-SOCKET-VERO13-18
Nichia	NV..S007Z / NF..T012B	7 mm	452 Typ L1	C13709_PF-SOCKET-VERO13-18

Mögliche Halter / COB Kombinationen / Holder / COB combinations LEDiL PF-Socket

COB Hersteller COB Supplier	COB Typ COB Type	LES LES	Halter Holder	Adapter Base part
Nichia	NF..S024B / NT..S024B	7 mm	452 Typ L1	C13709_PF-SOCKET-VERO13-18
Nichia	NJ..S024Z	7 mm	452 Typ L1	C13709_PF-SOCKET-VERO13-18
Nichia	NV..L016Z / NV..L024Z	9 mm	438 Typ L1	C13709_PF-SOCKET-VERO13-18
Nichia	NF..L036B / NF..L048B	12 mm	438 Typ L1	C13709_PF-SOCKET-VERO13-18
Nichia	NF..L060B	12 mm	438 Typ L1	C13709_PF-SOCKET-VERO13-18
Nichia	NV..J048Z / NF..J108B	15 mm	463 Typ L2	C13709_PF-SOCKET-VERO13-18
Nichia	NF..J130B	15 mm	463 Typ L2	C13709_PF-SOCKET-VERO13-18
Nichia	NJNWS012Z Tunable	6 mm	495 Typ L1 HV	C13709_PF-SOCKET-VERO13-18
Nichia	NJCWL024Z Tunable	7 mm	497 Typ L1 HV	C13709_PF-SOCKET-VERO13-18
Nichia	NVCWJ024Z Tunable	11 mm	498 Typ L2 HV	C13709_PF-SOCKET-VERO13-18
Philips	Fortimo SLM12xx .. 1215 G7	7 mm	452 Typ L1	C13709_PF-SOCKET-VERO13-18
Philips	Fortimo SLM12xx .. 1619 G7	9 mm	480 Typ L1	C13709_PF-SOCKET-VERO13-18
Philips	Fortimo SLM12xx .. 2024 G7	15 mm	432 Typ L2	C13709_PF-SOCKET-VERO13-18
Philips	Fortimo SLM12xx .. 1313 G7N	10 mm	434 Typ L1	C13709_PF-SOCKET-VERO13-18
Philips	Fortimo SLM12xx .. 1919 G7N	15 mm	433 Typ L1	C13709_PF-SOCKET-VERO13-18
Philips	Fortimo SLM13xx .. 2024 G8 UHE	15 mm	432 Typ L2	C13709_PF-SOCKET-VERO13-18
Philips	Fortimo L06A 1313 G7N Tunable	7 mm	509 Typ L1	C13709_PF-SOCKET-VERO13-18
Philips	Fortimo L09A 1919 G7N Tunable	9 mm	501 Typ L1	C13709_PF-SOCKET-VERO13-18
Prolight Opto	PASB	10 mm	434 Typ L1	C13709_PF-SOCKET-VERO13-18
Prolight Opto	PASQ/PAPQ DimToWarm	10 mm	434 Typ L1	C13709_PF-SOCKET-VERO13-18
Prolight Opto	PDSQ DimToWarm	8 mm	490 Typ L1	C13709_PF-SOCKET-VERO13-18
Prolight Opto	PDSR DimToWarm	15 mm	432 Typ L2	C13709_PF-SOCKET-VERO13-18
Samsung	LC 010C	6 mm	434 Typ L1	C13709_PF-SOCKET-VERO13-18
Samsung	LC 020C / 030C / 040C	12 mm	477 Typ L1	C13709_PF-SOCKET-VERO13-18
Samsung	LC 003D / 006D	10 mm	434 Typ L1	C13709_PF-SOCKET-VERO13-18
Samsung	LC 009D / 013D	10 mm	434 Typ L1	C13709_PF-SOCKET-VERO13-18
Samsung	LC 016D / 019D	16 mm	477 Typ L1	C13709_PF-SOCKET-VERO13-18
Samsung	LC 026D / 033D	16 mm	477 Typ L1	C13709_PF-SOCKET-VERO13-18
Samsung	LC010T Tunable	10 mm	501 Typ L1	C13709_PF-SOCKET-VERO13-18
Samsung	LC020T Tunable	13 mm	501 Typ L1	C13709_PF-SOCKET-VERO13-18
Seoul	SAW* 0661	6 mm	434 Typ L1	C13709_PF-SOCKET-VERO13-18
Seoul	SAW* 1062 / 1063	10 mm	434 Typ L1	C13709_PF-SOCKET-VERO13-18
Seoul	SAW* 1564 / 1565 / 1566	15 mm	477 Typ L1	C13709_PF-SOCKET-VERO13-18

Mögliche Halter / COB Kombinationen / Holder / COB combinations LEDiL PF-Socket

COB Hersteller COB Supplier	COB Typ COB Type	LES LES	Halter Holder	Adapter Base part
Tridonic	SLE ADV8 LES 04 / 06	9 mm	434 Typ L1	C13709_PF-SOCKET-VERO13-18
Tridonic	SLE ADV8 LES 09	9 mm	434 Typ L1	C13709_PF-SOCKET-VERO13-18
Tridonic	SLE ADV8 LES 13	13 mm	433 Typ L1	C13709_PF-SOCKET-VERO13-18
Tridonic	SLE ADV8 LES 15	15 mm	433 Typ L1	C13709_PF-SOCKET-VERO13-18
Tridonic	SLE SNC8 LES 06	6 mm	434 Typ L1	C13709_PF-SOCKET-VERO13-18
Tridonic	SLE SNC8 LES 09	10 mm	434 Typ L1	C13709_PF-SOCKET-VERO13-18
Tridonic	SLE SNC8 LES 15	15 mm	433 Typ L1	C13709_PF-SOCKET-VERO13-18
VS Lighting	DMS 102 ***W	6 mm	434 Typ L1	C13709_PF-SOCKET-VERO13-18
VS Lighting	DMS 124 ***W	9 mm	434 Typ L1	C13709_PF-SOCKET-VERO13-18
VS Lighting	DMS 125 / 126 / 128 ***W	14 mm	433 Typ L1	C13709_PF-SOCKET-VERO13-18
VS Lighting	DMS 1208J	15 mm	433 Typ L1	C13709_PF-SOCKET-VERO13-18
VS Lighting	VCA 042	4 mm	486 Typ L1	C13709_PF-SOCKET-VERO13-18
VS Lighting	VCA2 122 / 123 / 124	9 mm	486 Typ L1	C13709_PF-SOCKET-VERO13-18
VS Lighting	VCA2 126 / 128	14 mm	477 Typ L1	C13709_PF-SOCKET-VERO13-18
VS Lighting	TW 1914 Tunable	14 mm	493 Typ L1	C13709_PF-SOCKET-VERO13-18
VS Lighting	WU-M-618 DimToWarm	10 mm	434 Typ L1	C13709_PF-SOCKET-VERO13-18
Xicato	XOB 04	5 mm	486 Typ L1	C13709_PF-SOCKET-VERO13-18
Xicato	XOB 06 (B)	6 mm	486 Typ L1	C13709_PF-SOCKET-VERO13-18
Xicato	XOB 09	10 mm	434 Typ L1	C13709_PF-SOCKET-VERO13-18
Xicato	XOB 14	15 mm	433 Typ L1	C13709_PF-SOCKET-VERO13-18

LEDiL®

SAGA

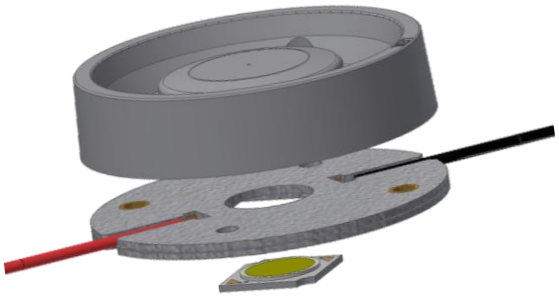

LEDiL Linse
LEDiL lense

CN13990_SAGA-HB-IP-WHT
FCA14933_SAGA-S-WHT

Hersteller Webseite
Manufacturer website

www.ledil.com

LED Halter B+W
LED Holder B+W

4xx / Typ L6

4xx Typ L6

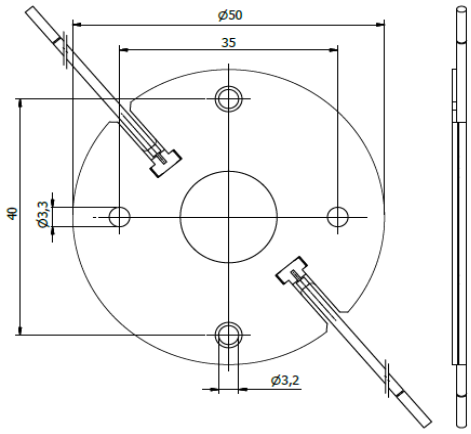

CN13990_SAGA-HB-IP-WHT

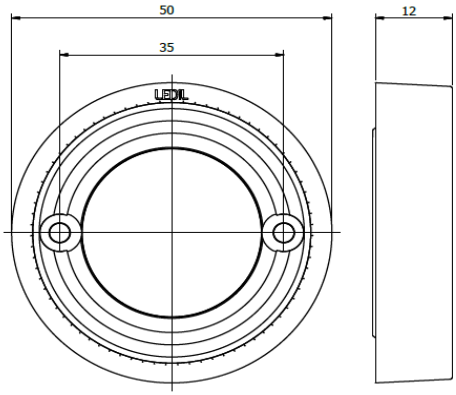

Mögliche Halter / COB Kombinationen / Holder / COB combinations LEDiL Saga

COB Hersteller COB Supplier	COB Typ COB Type	Halter Holder	Linse Lense
Bridgelux	V3 HD / V4 HD Gen 7,8	460 Typ L6	CN13990_SAGA-HB-IP-WHT
Bridgelux	V6 HD Gen 7,8	464 Typ L6	CN13990_SAGA-HB-IP-WHT
Bridgelux	V9 HD / V11 HD Gen 7,8	496 Typ L6	CN13990_SAGA-HB-IP-WHT
Bridgelux	V6 Gen 8,9 (just 2 pads!)	460 Typ L6	CN13990_SAGA-HB-IP-WHT
Bridgelux	V8 Gen 7,8,9 (4 pads)	460 Typ L6	CN13990_SAGA-HB-IP-WHT
Bridgelux	V10 Gen 7,8,9	486 Typ L6	CN13990_SAGA-HB-IP-WHT
Bridgelux	V13 Gen 7,8,9	477 Typ L6	CN13990_SAGA-HB-IP-WHT
Bridgelux	V15 Gen 7,8,9	456 Typ L6	CN13990_SAGA-HB-IP-WHT
Bridgelux	Vesta DTW 6/9mm Gen 1,2	490 Typ L6	CN13990_SAGA-HB-IP-WHT
Bridgelux	Vesta Tunable 6mm Gen 2	504 Typ L6	CN13990_SAGA-HB-IP-WHT
Bridgelux	Vesta Tunable 9mm Gen 2	489 Typ L6	CN13990_SAGA-HB-IP-WHT
Bridgelux	Vesta Tunable 13mm Gen 2	492 Typ L6	CN13990_SAGA-HB-IP-WHT

Mögliche Halter / COB Kombinationen / Holder / COB combinations LEDiL Saga

COB Hersteller COB Supplier	COB Typ COB Type	Halter Holder	Linse Lense
Citizen	CLU 028 / 02J / 02Q	434 Typ L6	CN13990_SAGA-HB-IP-WHT
Citizen	CLU 038 / 03H / 03J / 03Q	433 Typ L6	CN13990_SAGA-HB-IP-WHT
Citizen	CLU 702 / 703 / 7A2 /7A3 / 7B2	434 Typ L6	CN13990_SAGA-HB-IP-WHT
Citizen	CLU 712 / 713	477 Typ L6	CN13990_SAGA-HB-IP-WHT
Citizen	CLU 723	477 Typ L6	CN13990_SAGA-HB-IP-WHT
Citizen	LCN-C01B2 / C02B2 Tunable	481 Typ L6	CN13990_SAGA-HB-IP-WHT
Citizen	LCN-C04B2 / C05B2 Tunable	481 Typ L6	CN13990_SAGA-HB-IP-WHT
CREE	CHA 0825	433 Typ L6	CN13990_SAGA-HB-IP-WHT
CREE	CMA 1303 / 1306	448 Typ L6	CN13990_SAGA-HB-IP-WHT
CREE	CMA 1516	441 Typ L6	CN13990_SAGA-HB-IP-WHT
CREE	CMA 1825 / 1840	437 Typ L6	CN13990_SAGA-HB-IP-WHT
CREE	CMB 1304 / 1306	448 Typ L6	CN13990_SAGA-HB-IP-WHT
CREE	CMB 1507 / 1510 / 1516	441 Typ L6	CN13990_SAGA-HB-IP-WHT
CREE	CMB 1818 / 1825	437 Typ L6	CN13990_SAGA-HB-IP-WHT
CREE	CMB 1840	457 Typ L6	CN13990_SAGA-HB-IP-WHT
CREE	CMT 1407 / 1412 / 1420	434 Typ L6	CN13990_SAGA-HB-IP-WHT
CREE	CMT 1922 / 1925 / 1930 / 1945	477 Typ L6	CN13990_SAGA-HB-IP-WHT
CREE	CMU 1003 / 1006 / 1010 / 1013	434 Typ L6	CN13990_SAGA-HB-IP-WHT
CREE	CMU 1516 / 1519 / 1526 / 1532	433 Typ L6	CN13990_SAGA-HB-IP-WHT
CREE	CXB 1304 / 1310	448 Typ L6	CN13990_SAGA-HB-IP-WHT
CREE	CXB 1507 / 1512 / 1520	441 Typ L6	CN13990_SAGA-HB-IP-WHT
CREE	CXB 1816 / 1820	437 Typ L6	CN13990_SAGA-HB-IP-WHT
CREE	CXB 1830	457 Typ L6	CN13990_SAGA-HB-IP-WHT
Edison	2PHE 03 / 06 / 09 / 13	434 Typ L6	CN13990_SAGA-HB-IP-WHT
Lextar	PB 06 / 09 / 13	434 Typ L6	CN13990_SAGA-HB-IP-WHT
Lextar	PB 16 / 19 / 26	433 Typ L6	CN13990_SAGA-HB-IP-WHT
Lumileds	Luxeon 1202s / 1202HD	452 Typ L6	CN13990_SAGA-HB-IP-WHT
Lumileds	Luxeon 1202 / 1203 / 1204HD	480 Typ L6	CN13990_SAGA-HB-IP-WHT
Lumileds	Luxeon 1205HD	480 Typ L6	CN13990_SAGA-HB-IP-WHT
Lumileds	Luxeon 1204 / 1205	432 Typ L6	CN13990_SAGA-HB-IP-WHT
Lumileds	Luxeon 1208 / 1210	432 Typ L6	CN13990_SAGA-HB-IP-WHT
Lumileds	CS COB L02 / L04	434 Typ L6	CN13990_SAGA-HB-IP-WHT
Lumileds	CS COB L06 / L08 / L10	433 Typ L6	CN13990_SAGA-HB-IP-WHT

Mögliche Halter / COB Kombinationen / Holder / COB combinations LEDiL Saga

COB Hersteller COB Supplier	COB Typ COB Type	Halter Holder	Linse Lense
Lumileds	CX Plus HD S01H4, S0xH6	448 Typ L6	CN13990_SAGA-HB-IP-WHT
Lumileds	CX Plus HD S04H9	4xx Typ L6	CN13990_SAGA-HB-IP-WHT
Lumileds	CX Plus M02Fx / M03Fx	441 Typ L6	CN13990_SAGA-HB-IP-WHT
Lumileds	CX Plus L04Fx / L05Fx / L08Fx	437 Typ L6	CN13990_SAGA-HB-IP-WHT
Luminus	CHM-6-BH / CXM-6-xC	434 Typ L6	CN13990_SAGA-HB-IP-WHT
Luminus	CIM/CLM/CXM-9-xC	434 Typ L6	CN13990_SAGA-HB-IP-WHT
Luminus	CLM/CXM-9-xA	461 Typ L6	CN13990_SAGA-HB-IP-WHT
Luminus	CHM-9-BH	433 Typ L6	CN13990_SAGA-HB-IP-WHT
Luminus	CXM-11-xC	433 Typ L6	CN13990_SAGA-HB-IP-WHT
Luminus	CGM/CIM/CLM/CXM-14-xC	433 Typ L6	CN13990_SAGA-HB-IP-WHT
Luminus	CDM-6 / CDM-9Gen1 DtW	490 Typ L6	CN13990_SAGA-HB-IP-WHT
Luminus	CDM-9 Gen2 DtW	491 Typ L6	CN13990_SAGA-HB-IP-WHT
Luminus	CTM-6 / CTM-9 TW	495 Typ L6	CN13990_SAGA-HB-IP-WHT
Luminus	CTM-14 RGBW	500 Typ L6	CN13990_SAGA-HB-IP-WHT
Luxtech	COB-WD-10-1512	479 Typ L6	CN13990_SAGA-HB-IP-WHT
Luxtech	COB-WD-17-2420	491 Typ L6	CN13990_SAGA-HB-IP-WHT
Luxtech	COB-DN-16-2420	442 Typ L6	CN13990_SAGA-HB-IP-WHT
Nichia	NV..S007Z / NF..T012B	452 Typ L6	CN13990_SAGA-HB-IP-WHT
Nichia	NF..S024B / NT..S024B	452 Typ L6	CN13990_SAGA-HB-IP-WHT
Nichia	NJ..S024Z	452 Typ L6	CN13990_SAGA-HB-IP-WHT
Nichia	NV..L016Z / NV..L024Z	438 Typ L6	CN13990_SAGA-HB-IP-WHT
Nichia	NF..L036B / NF..L048B	438 Typ L6	CN13990_SAGA-HB-IP-WHT
Nichia	NF..L060B	438 Typ L6	CN13990_SAGA-HB-IP-WHT
Nichia	NV..J048Z / NF..J108B	463 Typ L6	CN13990_SAGA-HB-IP-WHT
Nichia	NF..J130B	463 Typ L6	CN13990_SAGA-HB-IP-WHT
Nichia	NJNWS012Z Tunable	495 Typ L6 HV	CN13990_SAGA-HB-IP-WHT
Nichia	NJCWL024Z Tunable	497 Typ L6 HV	CN13990_SAGA-HB-IP-WHT
Nichia	NVCWJ024Z Tunable	498 Typ L6 HV	CN13990_SAGA-HB-IP-WHT
Philips	Fortimo SLM12xx .. 1215 G7	452 Typ L6	CN13990_SAGA-HB-IP-WHT
Philips	Fortimo SLM12xx .. 1619 G7	480 Typ L6	CN13990_SAGA-HB-IP-WHT
Philips	Fortimo SLM12xx .. 2024 G7	432 Typ L6	CN13990_SAGA-HB-IP-WHT
Philips	Fortimo SLM12xx .. 1313 G7N	434 Typ L6	CN13990_SAGA-HB-IP-WHT
Philips	Fortimo SLM12xx .. 1919 G7N	433 Typ L6	CN13990_SAGA-HB-IP-WHT

Mögliche Halter / COB Kombinationen / Holder / COB combinations LEDiL Saga

COB Hersteller COB Supplier	COB Typ COB Type	Halter Holder	Linse Lense
Philips	Fortimo SLM13xx .. 2024 G8 UHE	432 Typ L6	CN13990_SAGA-HB-IP-WHT
Philips	Fortimo L06A 1313 G7N Tunable	509 Typ L6	CN13990_SAGA-HB-IP-WHT
Philips	Fortimo L09A 1919 G7N Tunable	501 Typ L6	CN13990_SAGA-HB-IP-WHT
Prolight Opto	PASB	434 Typ L6	CN13990_SAGA-HB-IP-WHT
Prolight Opto	PASQ/PAPQ DimToWarm	434 Typ L6	CN13990_SAGA-HB-IP-WHT
Prolight Opto	PDSQ DimToWarm	490 Typ L6	CN13990_SAGA-HB-IP-WHT
Prolight Opto	PDSR DimToWarm	432 Typ L6	CN13990_SAGA-HB-IP-WHT
Prolight Opto	PDSJ Tunable	442 Typ L6	CN13990_SAGA-HB-IP-WHT
Samsung	LC 010C	434 Typ L6	CN13990_SAGA-HB-IP-WHT
Samsung	LC 020C / 030C / 040C	477 Typ L6	CN13990_SAGA-HB-IP-WHT
Samsung	LC 003D / 006D	434 Typ L6	CN13990_SAGA-HB-IP-WHT
Samsung	LC 009D / 013D	434 Typ L6	CN13990_SAGA-HB-IP-WHT
Samsung	LC010T Tunable	501 Typ L6	CN13990_SAGA-HB-IP-WHT
Samsung	LC020T Tunable	501 Typ L6	CN13990_SAGA-HB-IP-WHT
Seoul	SAW* 0661	434 Typ L6	CN13990_SAGA-HB-IP-WHT
Seoul	SAW* 1062 / 1063	434 Typ L6	CN13990_SAGA-HB-IP-WHT
Seoul	SAW* 1564 / 1565 / 1566	477 Typ L6	CN13990_SAGA-HB-IP-WHT
Tridonic	SLE ADV8 LES 04 / 06	434 Typ L6	CN13990_SAGA-HB-IP-WHT
Tridonic	SLE ADV8 LES 09	434 Typ L6	CN13990_SAGA-HB-IP-WHT
Tridonic	SLE ADV8 LES 13	433 Typ L6	CN13990_SAGA-HB-IP-WHT
Tridonic	SLE ADV8 LES 15	433 Typ L6	CN13990_SAGA-HB-IP-WHT
Tridonic	SLE SNC8 LES 06	434 Typ L6	CN13990_SAGA-HB-IP-WHT
Tridonic	SLE SNC8 LES 09	434 Typ L6	CN13990_SAGA-HB-IP-WHT
Tridonic	SLE SNC8 LES 15	433 Typ L6	CN13990_SAGA-HB-IP-WHT
VS Lighting	DMS 102 ***W	434 Typ L6	CN13990_SAGA-HB-IP-WHT
VS Lighting	DMS 124 ***W	434 Typ L6	CN13990_SAGA-HB-IP-WHT
VS Lighting	DMS 125 / 126 / 128 ***W	433 Typ L6	CN13990_SAGA-HB-IP-WHT
VS Lighting	DMS 1208J	433 Typ L6	CN13990_SAGA-HB-IP-WHT
VS Lighting	VCA2 122 / 123 / 124	486 Typ L6	CN13990_SAGA-HB-IP-WHT
VS Lighting	VCA2 126 / 128	477 Typ L6	CN13990_SAGA-HB-IP-WHT
VS Lighting	TW 1914 Tunable	493 Typ L6	CN13990_SAGA-HB-IP-WHT
VS Lighting	WU-M-618 DimToWarm	434 Typ L6	CN13990_SAGA-HB-IP-WHT

Mögliche Halter / COB Kombinationen / Holder / COB combinations LEDiL Saga

COB Hersteller COB Supplier	COB Typ COB Type	Halter Holder	Linse Lense
Xicato	XOB 06 (B)	486 Typ L6	CN13990_SAGA-HB-IP-WHT
Xicato	XOB 09	434 Typ L6	CN13990_SAGA-HB-IP-WHT
Xicato	XOB 14	433 Typ L6	CN13990_SAGA-HB-IP-WHT

LEDiL®

STELLA
(Type L1)

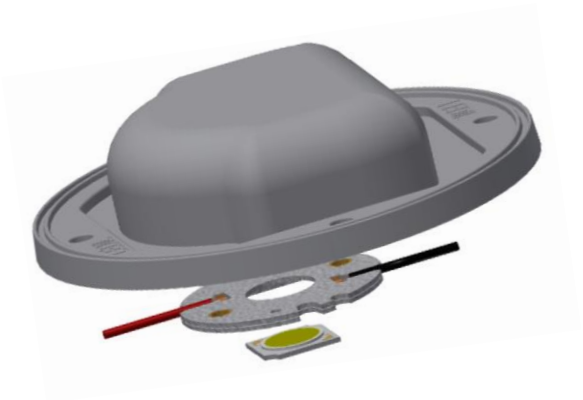

Passende LEDiL Optik
Suitable LEDiL optics

STELLA-A

LEDiL part numbers

Hersteller Webseite
Manufacturer website

www.ledil.com

LED Halter B+W
LED Holder B+W

4xx / Typ L1

4xx Typ L1

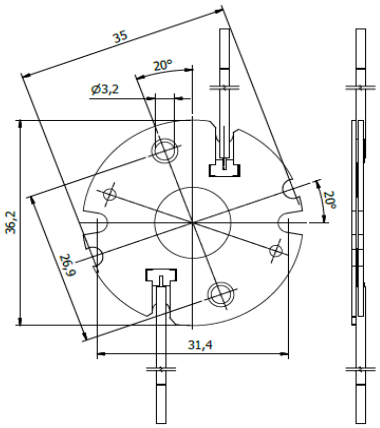

STELLA-A

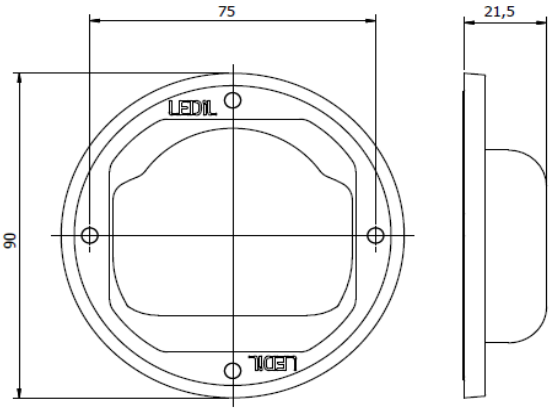

Mögliche Halter / COB Kombinationen / Holder / COB combinations **LEDiL Stella (L1)**

COB Hersteller COB Supplier	COB Typ COB Type	Halter Holder	Linse Lense
Bridgelux	V9 HD / V11 HD Gen 7,8	496 Typ L1	FN13323_STELLA-A
Bridgelux	V6 Gen 8,9 (just 2 pads!)	460 Typ L1	FN13323_STELLA-A
Bridgelux	V8 Gen 7,8,9 (4 pads)	460 Typ L1	FN13323_STELLA-A
Bridgelux	V10 Gen 7,8,9	486 Typ L1	FN13323_STELLA-A
Bridgelux	V13 Gen 7,8,9	477 Typ L1	FN13323_STELLA-A
Bridgelux	Vesta DTW 6/9mm Gen 1,2	490 Typ L1	FN13323_STELLA-A
Bridgelux	Vesta Tunable 9mm Gen 2	489 Typ L1	FN13323_STELLA-A
Bridgelux	Vesta Tunable 13mm Gen 2	492 Typ L1	FN13323_STELLA-A
Citizen	CLU 028 / 02J / 02Q	434 Typ L1	FN13323_STELLA-A
Citizen	CLU 038 / 03H / 03J / 03Q	433 Typ L1	FN13323_STELLA-A
Citizen	CLU 712 / 713	477 Typ L1	FN13323_STELLA-A

Mögliche Halter / COB Kombinationen / Holder / COB combinations LEDiL Stella (L1)

COB Hersteller COB Supplier	COB Typ COB Type	Halter Holder	Linse Lense
Citizen	CLU 723	477 Typ L1	FN13323_STELLA-A
CREE	CHA 0825	433 Typ L1	FN13323_STELLA-A
CREE	CMA 1516	441 Typ L1	FN13323_STELLA-A
CREE	CMA 1825 / 1840	437 Typ L1	FN13323_STELLA-A
CREE	CMB 1507 / 1510 / 1516	441 Typ L1	FN13323_STELLA-A
CREE	CMB 1818 / 1825	437 Typ L1	FN13323_STELLA-A
CREE	CMB 1840	457 Typ L1	FN13323_STELLA-A
CREE	CMT 1407 / 1412 / 1420	434 Typ L1	FN13323_STELLA-A
CREE	CMT 1922 / 1925 / 1930 / 1945	477 Typ L1	FN13323_STELLA-A
CREE	CMU 1003 / 1006 / 1010 / 1013	434 Typ L1	FN13323_STELLA-A
CREE	CMU 1516 / 1519 / 1526 / 1532	433 Typ L1	FN13323_STELLA-A
CREE	CXB 1507 / 1512 / 1520	441 Typ L1	FN13323_STELLA-A
CREE	CXB 1816 / 1820	437 Typ L1	FN13323_STELLA-A
CREE	CXB 1830	457 Typ L1	FN13323_STELLA-A
Edison	2PHE 03 / 06 / 09 / 13	434 Typ L1	FN13323_STELLA-A
Edison	2PHE 15 / 18 / 24 / 30	433 Typ L1	FN13323_STELLA-A
Lextar	PB 06 / 09 / 13	434 Typ L1	FN13323_STELLA-A
Lextar	PB 16 / 19 / 26	433 Typ L1	FN13323_STELLA-A
Lumileds	Luxeon 1202 / 1203 / 1204HD	480 Typ L1	FN13323_STELLA-A
Lumileds	Luxeon 1205HD	480 Typ L1	FN13323_STELLA-A
Lumileds	CS COB L02 / L04	434 Typ L1	FN13323_STELLA-A
Lumileds	CS COB L06 / L08 / L10	433 Typ L1	FN13323_STELLA-A
Lumileds	CX Plus HD S04H9	4xx Typ L1	FN13323_STELLA-A
Lumileds	CX Plus M02Fx / M03Fx	441 Typ L1	FN13323_STELLA-A
Lumileds	CX Plus L04Fx / L05Fx / L08Fx	437 Typ L1	FN13323_STELLA-A
Luminus	CIM/CLM/CXM-9-xC	434 Typ L1	FN13323_STELLA-A
Luminus	CLM/CXM-9-xA	461 Typ L1	FN13323_STELLA-A
Luminus	CHM-9-BH	433 Typ L1	FN13323_STELLA-A
Luminus	CXM-11-xC	433 Typ L1	FN13323_STELLA-A
Luminus	CGM/CIM/CLM/CXM-14-xC	433 Typ L1	FN13323_STELLA-A
Luminus	CDM-6 / CDM-9Gen1 DtW	490 Typ L1	FN13323_STELLA-A
Luminus	CTM-6 / CTM-9 TW	495 Typ L1	FN13323_STELLA-A

Mögliche Halter / COB Kombinationen / Holder / COB combinations LEDiL Stella (L1)

COB Hersteller COB Supplier	COB Typ COB Type	Halter Holder	Linse Lense
Nichia	NV..L016Z / NV..L024Z	438 Typ L1	FN13323_STELLA-A
Nichia	NF..L036B / NF..L048B	438 Typ L1	FN13323_STELLA-A
Nichia	NF..L060B	438 Typ L1	FN13323_STELLA-A
Philips	Fortimo SLM12xx .. 1619 G7	480 Typ L1	FN13323_STELLA-A
Philips	Fortimo SLM12xx .. 1313 G7N	434 Typ L1	FN13323_STELLA-A
Philips	Fortimo SLM12xx .. 1919 G7N	433 Typ L1	FN13323_STELLA-A
Philips	Fortimo L09A 1919 G7N Tunable	501 Typ L1	FN13323_STELLA-A
Prolight Opto	PASB	434 Typ L1	FN13323_STELLA-A
Prolight Opto	PASQ/PAPQ DimToWarm	434 Typ L1	FN13323_STELLA-A
Samsung	LC 020C / 030C / 040C	477 Typ L1	FN13323_STELLA-A
Samsung	LC 003D / 006D	434 Typ L1	FN13323_STELLA-A
Samsung	LC 009D / 013D	434 Typ L1	FN13323_STELLA-A
Samsung	LC 016D / 019D	477 Typ L1	FN13323_STELLA-A
Samsung	LC 026D / 033D	477 Typ L1	FN13323_STELLA-A
Samsung	LC010T Tunable	501 Typ L1	FN13323_STELLA-A
Samsung	LC020T Tunable	501 Typ L1	FN13323_STELLA-A
Seoul	SAW* 1062 / 1063	434 Typ L1	FN13323_STELLA-A
Seoul	SAW* 1564 / 1565 / 1566	477 Typ L1	FN13323_STELLA-A
Tridonic	SLE ADV8 LES 04 / 06	434 Typ L1	FN13323_STELLA-A
Tridonic	SLE ADV8 LES 09	434 Typ L1	FN13323_STELLA-A
Tridonic	SLE ADV8 LES 13	433 Typ L1	FN13323_STELLA-A
Tridonic	SLE ADV8 LES 15	433 Typ L1	FN13323_STELLA-A
Tridonic	SLE SNC8 LES 09	434 Typ L1	FN13323_STELLA-A
Tridonic	SLE SNC8 LES 15	433 Typ L1	FN13323_STELLA-A
VS Lighting	DMS 124 ***W	434 Typ L1	FN13323_STELLA-A
VS Lighting	DMS 125 / 126 / 128 ***W	433 Typ L1	FN13323_STELLA-A
VS Lighting	DMS 1208J	433 Typ L1	FN13323_STELLA-A
VS Lighting	VCA2 122 / 123 / 124	486 Typ L1	FN13323_STELLA-A
VS Lighting	VCA2 126 / 128	477 Typ L1	FN13323_STELLA-A

Mögliche Halter / COB Kombinationen / Holder / COB combinations LEDiL Stella (L1)

COB Hersteller COB Supplier	COB Typ COB Type	Halter Holder	Linse Lense
VS Lighting	TW 1914 Tunable	493 Typ L1	FN13323_STELLA-A
VS Lighting	WU-M-618 DimToWarm	434 Typ L1	FN13323_STELLA-A
Xicato	XOB 09	434 Typ L1	FN13323_STELLA-A
Xicato	XOB 14	433 Typ L1	FN13323_STELLA-A

LEDiL®

STELLA
(Type L4)

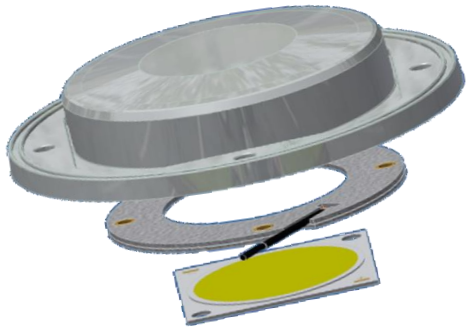

Passende LEDiL Optik Suitable LEDiL optics	**STELLA-HB** **STELLA-HB-WWW** **STELLA-FRESNEL** **STELLA-RS** **STELLA-G2-VSM** LEDiL part numbers
Hersteller Webseite Manufacturer website	www.ledil.com
LED Halter B+W LED Holder B+W	4xx / Typ L4

4xx / Typ L4

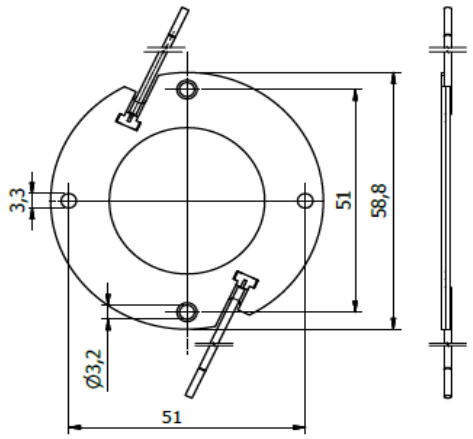

eg. STELLA-HB

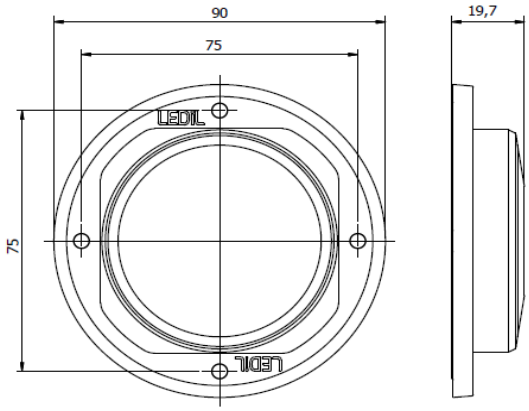

Mögliche Halter / COB Kombinationen / Holder / COB combinations **LEDiL STELLA (L4)**

COB Hersteller COB Supplier	COB Typ COB Type	Halter Holder	Linse Lense
Bridgelux	**V18 Gen 7,8,9**	**462 Typ L4**	**see LEDiL website**
Bridgelux	**V22 Gen 7,8,9**	**431 Typ L4**	**see LEDiL website**
Bridgelux	**Vesta DTW 18mm Gen 1**	**505 Typ L4**	**see LEDiL website**
Bridgelux	**Vesta DTW 29mm Gen 1**	**506 Typ L4**	**see LEDiL website**
Bridgelux	**Vesta Tunable 18mm Gen 2**	**483 Typ L4**	**see LEDiL website**
Bridgelux	**Vesta Tunable 22mm Gen 2**	**494 Typ L4**	**see LEDiL website**
Bridgelux	**Vesta Tunable 29mm Gen 2**	**503 Typ L4**	**see LEDiL website**
Citizen	**CLU 048 / 04H / 04J / 04Q**	**431 Typ L4**	**see LEDiL website**

Mögliche Halter / COB Kombinationen / Holder / COB combinations LEDiL STELLA (L4)

COB Hersteller COB Supplier	COB Typ COB Type	Halter Holder	Linse Lense
Citizen	CLU 058 / 05Q ..1825	458 Typ L4	see LEDiL website
Citizen	CLU 058 / 05H / 05Q ..3618	458 Typ L4 HV	see LEDiL website
Citizen	CLU 550 / 551	476 Typ L4 HV	see LEDiL website
Citizen	LCN-C07A2 Tunable	507 Typ L4	see LEDiL website
CREE	CMA 2550	439 Typ L4	see LEDiL website
CREE	CMA 3090	447 Typ L4	see LEDiL website
CREE	CMB 2550	439 Typ L4	see LEDiL website
CREE	CMB 3090	447 Typ L4	see LEDiL website
CREE	CMT 2850 / 2870 / 2890	471 Typ L4	see LEDiL website
CREE	CMU 2236 / 2239 / 2258 / 2287	471 Typ L4	see LEDiL website
CREE	CXB 2530 / 2540	439 Typ L4	see LEDiL website
CREE	CXB 3050 / 3070	447 Typ L4	see LEDiL website
CREE	CXB 3590	449 Typ L4	see LEDiL website
Edison	2PHE 55 / 60 / 83	431 Typ L4	see LEDiL website
Lextar	PB 38 / 54	431 Typ L4	see LEDiL website
Lumileds	Luxeon 1211	431 Typ L4	see LEDiL website
Lumileds	Luxeon 1213 / 1216 / 1812 / 1816	431 Typ L4	see LEDiL website
Lumileds	Luxeon 1321 / 1825	458 Typ L4	see LEDiL website
Lumileds	CS COB L11 / L13 / L16	431 Typ L4	see LEDiL website
Lumileds	CS COB R12 / R18	431 Typ L4	see LEDiL website
Luminus	CXM-18 Gen6	431 Typ L4	see LEDiL website
Luminus	CGM/CIM/CLM/CXM-22-xC	431 Typ L4	see LEDiL website
Luminus	CVM/CXM-27	454 Typ L4	see LEDiL website
Luminus	CVM/CXM-32	458 Typ L4	see LEDiL website
Luminus	CTM-18 Gen2 TW	483 Typ L4	see LEDiL website
Luminus	CTM-22 TW	494 Typ L4	see LEDiL website
Nichia	NF..H306B	488 Typ L4 HV	see LEDiL website
Philips	Fortimo SLM12xx .. 2828 G7	431 Typ L4	see LEDiL website

Mögliche Halter / COB Kombinationen / Holder / COB combinations LEDiL STELLA (L4)

COB Hersteller COB Supplier	COB Typ COB Type	Halter Holder	Linse Lense
Philips	Fortimo SLM12xx .. 2828 G7N	431 Typ L4	see LEDiL website
Philips	Fortimo SLM13xx .. 2828 G8 UHE	431 Typ L4	see LEDiL website
Samsung	LC 040D / 060D / 080D	431 Typ L4	see LEDiL website
Samsung	LC035T Tunable	502 Typ L4	see LEDiL website
Seoul	SAW* 22AA / 2296	431 Typ L4	see LEDiL website
Seoul	SAW* 2298 / 226A	431 Typ L4	see LEDiL website
Seoul	SAW* 33EA / 33GC	458 Typ L4 HV	see LEDiL website
Tridonic	SLE ADV8 LES 21	431 Typ L4	see LEDiL website
VS Lighting	DMS 12C / 18B ***W	431 Typ L4	see LEDiL website
VS Lighting	DMS 1212J / 1812J	431 Typ L4	see LEDiL website
VS Lighting	VCA2 1211 / 1213	471 Typ L4	see LEDiL website
VS Lighting	TW 2820 Tunable	494 Typ L4	see LEDiL website
Xicato	XOB 23	431 Typ L4	see LEDiL website
Xicato	XOB 32	458 Typ L4	see LEDiL website

LEDiL®

STELLA (Type Z1)

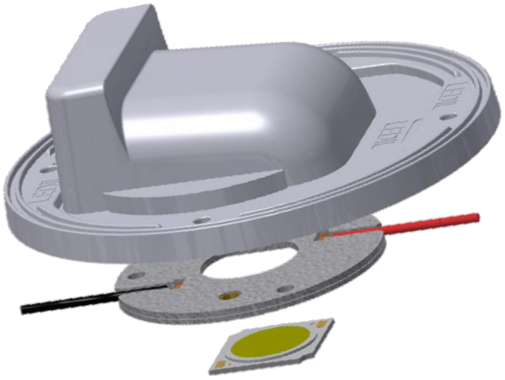

Passende LEDiL Optik Suitable LEDiL optics	**STELLA-T4** **STELLA-VSM** **STELLA-DWC2** **STELLA-G2-T2** **STELLA-G2-T3** **STELLA-G2-T4** LEDiL part numbers
Hersteller Webseite Manufacturer website	www.ledil.com
LED Halter B+W LED Holder B+W	4xx / Typ Z1

4xx Typ Z1

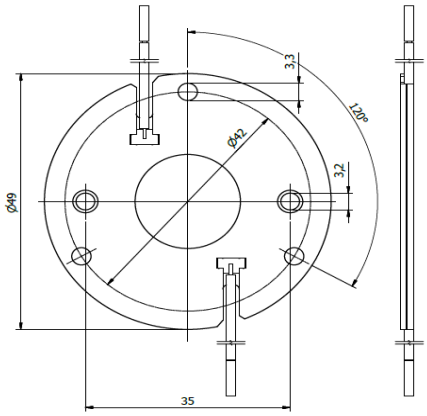

eg. STELLA-DWC2

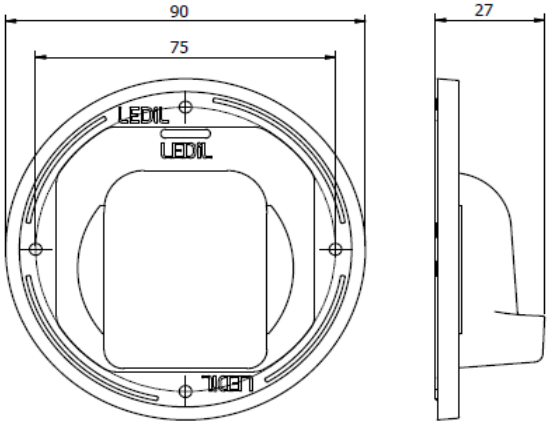

Mögliche Halter / COB Kombinationen / Holder / COB combinations **LEDiL STELLA (Z1)**

COB Hersteller COB Supplier	COB Typ COB Type	Halter Holder	Linse Lense
Bridgelux	**V9 HD / V11 HD Gen 7,8**	**496 Typ Z1**	**see LEDiL website**
Bridgelux	**V10 Gen 7,8,9**	**486 Typ Z1**	**see LEDiL website**
Bridgelux	**V13 Gen 7,8,9**	**477 Typ Z1**	**see LEDiL website**
Bridgelux	**V15 Gen 7,8,9**	**456 Typ Z1**	**see LEDiL website**
Bridgelux	**V18 Gen 7,8,9**	**462 Typ Z1**	**see LEDiL website**
Bridgelux	**V22 Gen 7,8,9**	**431 Typ Z1**	**see LEDiL website**
Bridgelux	**Vesta DTW 13/15mm Gen 1,2**	**491 Typ Z1**	**see LEDiL website**
Bridgelux	**Vesta DTW 18mm Gen 1**	**505 Typ Z1**	**see LEDiL website**

Mögliche Halter / COB Kombinationen / Holder / COB combinations LEDiL STELLA (Z1)

COB Hersteller COB Supplier	COB Typ COB Type	Halter Holder	Linse Lense
Bridgelux	Vesta Tunable 9mm Gen 2	489 Typ Z1	see LEDiL website
Bridgelux	Vesta Tunable 13mm Gen 2	492 Typ Z1	see LEDiL website
Bridgelux	Vesta Tunable 15mm Gen 2	482 Typ Z1	see LEDiL website
Bridgelux	Vesta Tunable 18mm Gen 2	483 Typ Z1	see LEDiL website
Bridgelux	Vesta Tunable 22mm Gen 2	494 Typ Z1	see LEDiL website
Citizen	CLU 028 / 02J / 02Q	434 Typ Z1	see LEDiL website
Citizen	CLU 038 / 03H / 03J / 03Q	433 Typ Z1	see LEDiL website
Citizen	CLU 048 / 04H / 04J / 04Q	431 Typ Z1	see LEDiL website
Citizen	CLU 723	477 Typ Z1	see LEDiL website
Citizen	CLU 733	471 Typ Z1	see LEDiL website
Citizen	LCN-C01B2 / C02B2 Tunable	481 Typ Z1	see LEDiL website
Citizen	LCN-C04B2 / C05B2 Tunable	481 Typ Z1	see LEDiL website
CREE	CMA 1516	441 Typ Z1	see LEDiL website
CREE	CMA 1825 / 1840	437 Typ Z1	see LEDiL website
CREE	CMA 2550	439 Typ Z1	see LEDiL website
CREE	CMA 3090	447 Typ Z1	see LEDiL website
CREE	CMB 1507 / 1510 / 1516	441 Typ Z1	see LEDiL website
CREE	CMB 1818 / 1825	437 Typ Z1	see LEDiL website
CREE	CMB 1840	457 Typ Z1	see LEDiL website
CREE	CMB 2550	439 Typ Z1	see LEDiL website
CREE	CMB 3090	447 Typ Z1	see LEDiL website
CREE	CMT 1407 / 1412 / 1420	434 Typ Z1	see LEDiL website
CREE	CMT 1922 / 1925 / 1930 / 1945	477 Typ Z1	see LEDiL website
CREE	CMT 2850 / 2870 / 2890	471 Typ Z1	see LEDiL website
CREE	CMU 1003 / 1006 / 1010 / 1013	434 Typ Z1	see LEDiL website
CREE	CMU 1516 / 1519 / 1526 / 1532	433 Typ Z1	see LEDiL website
CREE	CMU 2236 / 2239 / 2258 / 2287	471 Typ Z1	see LEDiL website
CREE	CXB 1507 / 1512 / 1520	441 Typ Z1	see LEDiL website
CREE	CXB 1816 / 1820	437 Typ Z1	see LEDiL website
CREE	CXB 1830	457 Typ Z1	see LEDiL website
CREE	CXB 2530 / 2540	439 Typ Z1	see LEDiL website
CREE	CXB 3050 / 3070	447 Typ Z1	see LEDiL website
Edison	2PHE 03 / 06 / 09 / 13	434 Typ Z1	see LEDiL website
Edison	2PHE 15 / 18 / 24 / 30	433 Typ Z1	see LEDiL website

Mögliche Halter / COB Kombinationen / Holder / COB combinations LEDiL STELLA (Z1)

COB Hersteller COB Supplier	COB Typ COB Type	Halter Holder	Linse Lense
Edison	2PHE 55 / 60 / 83	431 Typ Z1	see LEDiL website
Lextar	PB 06 / 09 / 13	434 Typ Z1	see LEDiL website
Lextar	PB 16 / 19 / 26	433 Typ Z1	see LEDiL website
Lextar	PB 38 / 54	431 Typ Z1	see LEDiL website
Lumileds	Luxeon 1202 / 1203 / 1204HD	480 Typ Z1	see LEDiL website
Lumileds	Luxeon 1205HD	480 Typ Z1	see LEDiL website
Lumileds	Luxeon 1204 / 1205	432 Typ Z1	see LEDiL website
Lumileds	Luxeon 1208 / 1210	432 Typ Z1	see LEDiL website
Lumileds	Luxeon 1211	431 Typ Z1	see LEDiL website
Lumileds	Luxeon 1213 / 1216 / 1812 / 1816	431 Typ Z1	see LEDiL website
Lumileds	CS COB L02 / L04	434 Typ Z1	see LEDiL website
Lumileds	CS COB L06 / L08 / L10	433 Typ Z1	see LEDiL website
Lumileds	CS COB L11 / L13 / L16	431 Typ Z1	see LEDiL website
Lumileds	CS COB R12 / R18	431 Typ Z1	see LEDiL website
Lumileds	CX Plus HD S04H9	4xx Typ Z1	see LEDiL website
Lumileds	CX Plus M02Fx / M03Fx	441 Typ Z1	see LEDiL website
Lumileds	CX Plus L04Fx / L05Fx / L08Fx	437 Typ Z1	see LEDiL website
Luminus	CIM/CLM/CXM-9-xC	434 Typ Z1	see LEDiL website
Luminus	CLM/CXM-9-xA	461 Typ Z1	see LEDiL website
Luminus	CHM-9-BH	433 Typ Z1	see LEDiL website
Luminus	CXM-11-xC	433 Typ Z1	see LEDiL website
Luminus	CGM/CIM/CLM/CXM-14-xC	433 Typ Z1	see LEDiL website
Luminus	CVM/CXM-18	453 Typ Z1	see LEDiL website
Luminus	CXM-18 Gen6	431 Typ Z1	see LEDiL website
Luminus	CGM/CIM/CLM/CXM-22-xC	431 Typ Z1	see LEDiL website
Luminus	CDM-9 Gen2 DtW	491 Typ Z1	see LEDiL website
Luminus	CDM-14/CDM-18 DtW	491 Typ Z1	see LEDiL website
Luminus	CTM-14 TW	442 Typ Z1	see LEDiL website
Luminus	CTM-14 RGBW	500 Typ Z1	see LEDiL website
Luminus	CTM-18 Gen1 TW	442 Typ Z1	see LEDiL website
Luminus	CTM-18 Gen2 TW	483 Typ Z1	see LEDiL website
Luminus	CTM-22 TW	494 Typ Z1	see LEDiL website
Luxtech	COB-WD-17-2420	491 Typ Z1	see LEDiL website

Mögliche Halter / COB Kombinationen / Holder / COB combinations LEDiL STELLA (Z1)

COB Hersteller COB Supplier	COB Typ COB Type	Halter Holder	Linse Lense
Luxtech	COB-DN-16-2420	442 Typ Z1	see LEDiL website
Nichia	NV..L016Z / NV..L024Z	438 Typ Z1	see LEDiL website
Nichia	NF..L036B / NF..L048B	438 Typ Z1	see LEDiL website
Nichia	NF..L060B	438 Typ Z1	see LEDiL website
Nichia	NV..J048Z / NF..J108B	463 Typ Z1	see LEDiL website
Nichia	NF..J130B	463 Typ Z1	see LEDiL website
Nichia	NVCWJ024Z Tunable	498 Typ Z1 HV	see LEDiL website
Philips	Fortimo SLM12xx .. 1619 G7	480 Typ Z1	see LEDiL website
Philips	Fortimo SLM12xx .. 2024 G7	432 Typ Z1	see LEDiL website
Philips	Fortimo SLM12xx .. 2828 G7	431 Typ Z1	see LEDiL website
Philips	Fortimo SLM12xx .. 1313 G7N	434 Typ Z1	see LEDiL website
Philips	Fortimo SLM12xx .. 1919 G7N	433 Typ Z1	see LEDiL website
Philips	Fortimo SLM12xx .. 2828 G7N	431 Typ Z1	see LEDiL website
Philips	Fortimo SLM13xx .. 2024 G8 UHE	432 Typ Z1	see LEDiL website
Philips	Fortimo SLM13xx .. 2828 G8 UHE	431 Typ Z1	see LEDiL website
Philips	Fortimo L09A 1919 G7N Tunable	501 Typ Z1	see LEDiL website
Prolight Opto	PASB	434 Typ Z1	see LEDiL website
Prolight Opto	PASQ/PAPQ DimToWarm	434 Typ Z1	see LEDiL website
Prolight Opto	PDSR DimToWarm	432 Typ Z1	see LEDiL website
Prolight Opto	PDSJ Tunable	442 Typ Z1	see LEDiL website
Samsung	LC 020C / 030C / 040C	477 Typ Z1	see LEDiL website
Samsung	LC 003D / 006D	434 Typ Z1	see LEDiL website
Samsung	LC 009D / 013D	434 Typ Z1	see LEDiL website
Samsung	LC 016D / 019D	477 Typ Z1	see LEDiL website
Samsung	LC 026D / 033D	477 Typ Z1	see LEDiL website
Samsung	LC 040D / 060D / 080D	431 Typ Z1	see LEDiL website
Samsung	LC010T Tunable	501 Typ Z1	see LEDiL website
Samsung	LC020T Tunable	501 Typ Z1	see LEDiL website
Samsung	LC035T Tunable	502 Typ Z1	see LEDiL website
Seoul	SAW* 1062 / 1063	434 Typ Z1	see LEDiL website
Seoul	SAW* 1564 / 1565 / 1566	477 Typ Z1	see LEDiL website
Seoul	SAW* 22AA / 2296	431 Typ Z1	see LEDiL website

Mögliche Halter / COB Kombinationen / Holder / COB combinations LEDiL STELLA (Z1)

COB Hersteller COB Supplier	COB Typ COB Type	Halter Holder	Linse Lense
Seoul	SAW* 2298 / 226A	431 Typ Z1	see LEDiL website
Tridonic	SLE ADV8 LES 04 / 06	434 Typ Z1	see LEDiL website
Tridonic	SLE ADV8 LES 09	434 Typ Z1	see LEDiL website
Tridonic	SLE ADV8 LES 13	433 Typ Z1	see LEDiL website
Tridonic	SLE ADV8 LES 15	433 Typ Z1	see LEDiL website
Tridonic	SLE SNC8 LES 09	434 Typ Z1	see LEDiL website
Tridonic	SLE SNC8 LES 15	433 Typ Z1	see LEDiL website
VS Lighting	DMS 124 ***W	434 Typ Z1	see LEDiL website
VS Lighting	DMS 125 / 126 / 128 ***W	433 Typ Z1	see LEDiL website
VS Lighting	DMS 120 ***W	431 Typ Z1	see LEDiL website
VS Lighting	DMS 12C / 18B ***W	431 Typ Z1	see LEDiL website
VS Lighting	DMS 1208J	433 Typ Z1	see LEDiL website
VS Lighting	DMS 1212J / 1812J	431 Typ Z1	see LEDiL website
VS Lighting	VCA2 122 / 123 / 124	486 Typ Z1	see LEDiL website
VS Lighting	VCA2 126 / 128	477 Typ Z1	see LEDiL website
VS Lighting	VCA2 1211 / 1213	471 Typ Z1	see LEDiL website
VS Lighting	TW 1914 Tunable	493 Typ Z1	see LEDiL website
VS Lighting	TW 2820 Tunable	494 Typ Z1	see LEDiL website
VS Lighting	WU-M-618 DimToWarm	434 Typ Z1	see LEDiL website
Xicato	XOB 09	434 Typ Z1	see LEDiL website
Xicato	XOB 14	433 Typ Z1	see LEDiL website
Xicato	XOB 23	431 Typ Z1	see LEDiL website

LEDiL®

WINNIE

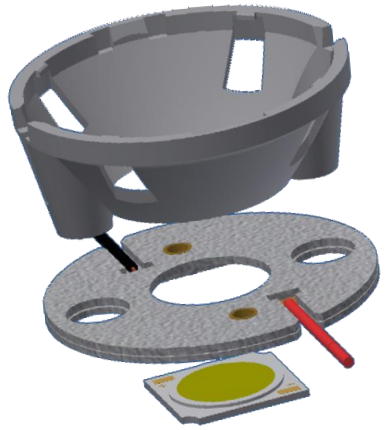

LEDiL Linse
LEDiL lense

LEDiL part numbers

Hersteller Webseite
Manufacturer website

www.ledil.com

LED Halter B+W
LED Holder B+W

4xx / Typ L5

Für WINNIE-HLD_C ist die passende Lösung unter LEDiL HEKLA aufgeführt
Take care that WINNIE-HLD-C requieres a different solution available under LEDiL HEKLA

4xx / Typ L5

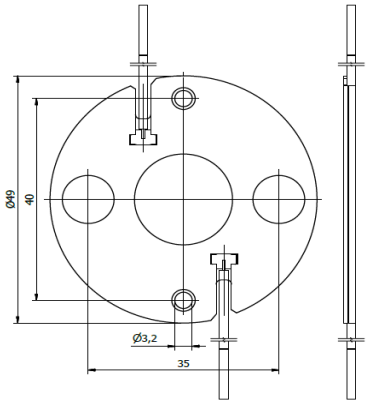

CN14xxx WINNIE-x

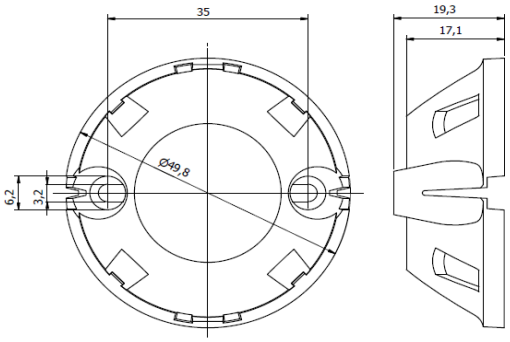

Mögliche Halter / COB Kombinationen / Holder / COB combinations **LEDiL WINNIE**

COB Hersteller COB Supplier	COB Typ COB Type	Halter Holder	Linse Lense
Bridgelux	V3 HD / V4 HD Gen 7,8	460 Typ L5	see part numbers above
Bridgelux	V6 HD Gen 7,8	464 Typ L5	see part numbers above
Bridgelux	V9 HD / V11 HD Gen 7,8	496 Typ L5	see part numbers above
Bridgelux	V6 Gen 8,9 (just 2 pads!)	460 Typ L5	see part numbers above
Bridgelux	V8 Gen 7,8,9 (4 pads)	460 Typ L5	see part numbers above
Bridgelux	V10 Gen 7,8,9	486 Typ L5	see part numbers above
Bridgelux	V13 Gen 7,8,9	477 Typ L5	see part numbers above
Bridgelux	V15 Gen 7,8,9	456 Typ L5	see part numbers above
Bridgelux	V18 Gen 7,8,9	462 Typ L5	see part numbers above
Bridgelux	Vesta DTW 6/9mm Gen 1,2	490 Typ L5	see part numbers above
Bridgelux	Vesta DTW 13/15mm Gen 1,2	491 Typ L5	see part numbers above

Mögliche Halter / COB Kombinationen / Holder / COB combinations LEDiL WINNIE

COB Hersteller COB Supplier	COB Typ COB Type	Halter Holder	Linse Lense
Bridgelux	Vesta DTW 18mm Gen 1	505 Typ L5	see part numbers above
Bridgelux	Vesta Tunable 6mm Gen 2	504 Typ L5	see part numbers above
Bridgelux	Vesta Tunable 9mm Gen 2	489 Typ L5	see part numbers above
Bridgelux	Vesta Tunable 13mm Gen 2	492 Typ L5	see part numbers above
Bridgelux	Vesta Tunable 15mm Gen 2	482 Typ L5	see part numbers above
Bridgelux	Vesta Tunable 18mm Gen 2	483 Typ L5	see part numbers above
Citizen	CLU 028 / 02J / 02Q	434 Typ L5	see part numbers above
Citizen	CLU 038 / 03H / 03J / 03Q	433 Typ L5	see part numbers above
Citizen	CLU 702 / 703 / 7A2 /7A3 / 7B2	434 Typ L5	see part numbers above
Citizen	CLU 712 / 713	477 Typ L5	see part numbers above
Citizen	CLU 723	477 Typ L5	see part numbers above
Citizen	LCN-C01B2 / C02B2 Tunable	481 Typ L5	see part numbers above
Citizen	LCN-C04B2 / C05B2 Tunable	481 Typ L5	see part numbers above
CREE	CHA 0825	433 Typ L5	see part numbers above
CREE	CMA 1303 / 1306	448 Typ L5	see part numbers above
CREE	CMA 1516	441 Typ L5	see part numbers above
CREE	CMA 1825 / 1840	437 Typ L5	see part numbers above
CREE	CMA 2550	439 Typ L5	see part numbers above
CREE	CMB 1304 / 1306	448 Typ L5	see part numbers above
CREE	CMB 1507 / 1510 / 1516	441 Typ L5	see part numbers above
CREE	CMB 1818 / 1825	437 Typ L5	see part numbers above
CREE	CMB 1840	457 Typ L5	see part numbers above
CREE	CMB 2550	439 Typ L5	see part numbers above
CREE	CMT 1407 / 1412 / 1420	434 Typ L5	see part numbers above
CREE	CMT 1922 / 1925 / 1930 / 1945	477 Typ L5	see part numbers above
CREE	CMU 1003 / 1006 / 1010 / 1013	434 Typ L5	see part numbers above
CREE	CMU 1516 / 1519 / 1526 / 1532	433 Typ L5	see part numbers above
CREE	CXB 1304 / 1310	448 Typ L5	see part numbers above
CREE	CXB 1507 / 1512 / 1520	441 Typ L5	see part numbers above
CREE	CXB 1816 / 1820	437 Typ L5	see part numbers above
CREE	CXB 1830	457 Typ L5	see part numbers above
CREE	CXB 2530 / 2540	439 Typ L5	see part numbers above
Edison	2PHE 03 / 06 / 09 / 13	434 Typ L5	see part numbers above
Edison	2PHE 15 / 18 / 24 / 30	433 Typ L5	see part numbers above

Mögliche Halter / COB Kombinationen / Holder / COB combinations LEDiL WINNIE

COB Hersteller COB Supplier	COB Typ COB Type	Halter Holder	Linse Lense
Lextar	PB 06 / 09 / 13	434 Typ L5	see part numbers above
Lextar	PB 16 / 19 / 26	433 Typ L5	see part numbers above
Lumileds	Luxeon 1202s / 1202HD	452 Typ L5	see part numbers above
Lumileds	Luxeon 1202 / 1203 / 1204HD	480 Typ L5	see part numbers above
Lumileds	Luxeon 1205HD	480 Typ L5	see part numbers above
Lumileds	Luxeon 1204 / 1205	432 Typ L5	see part numbers above
Lumileds	Luxeon 1208 / 1210	432 Typ L5	see part numbers above
Lumileds	CS COB L02 / L04	434 Typ L5	see part numbers above
Lumileds	CS COB L06 / L08 / L10	433 Typ L5	see part numbers above
Lumileds	CX Plus HD S01H4, S0xH6	448 Typ L5	see part numbers above
Lumileds	CX Plus HD S04H9	4xx Typ L5	see part numbers above
Lumileds	CX Plus M02Fx / M03Fx	441 Typ L5	see part numbers above
Lumileds	CX Plus L04Fx / L05Fx / L08Fx	437 Typ L5	see part numbers above
Luminus	CHM-6-BH / CXM-6-xC	434 Typ L5	see part numbers above
Luminus	CIM/CLM/CXM-9-xC	434 Typ L5	see part numbers above
Luminus	CLM/CXM-9-xA	461 Typ L5	see part numbers above
Luminus	CHM-9-BH	433 Typ L5	see part numbers above
Luminus	CXM-11-xC	433 Typ L5	see part numbers above
Luminus	CGM/CIM/CLM/CXM-14-xC	433 Typ L5	see part numbers above
Luminus	CVM/CXM-18	453 Typ L5	see part numbers above
Luminus	CDM-6 / CDM-9Gen1 DtW	490 Typ L5	see part numbers above
Luminus	CDM-9 Gen2 DtW	491 Typ L5	see part numbers above
Luminus	CDM-14/CDM-18 DtW	491 Typ L5	see part numbers above
Luminus	CTM-6 / CTM-9 TW	495 Typ L5	see part numbers above
Luminus	CTM-14 TW	442 Typ L5	see part numbers above
Luminus	CTM-14 RGBW	500 Typ L5	see part numbers above
Luminus	CTM-18 Gen1 TW	442 Typ L5	see part numbers above
Luminus	CTM-18 Gen2 TW	483 Typ L5	see part numbers above
Luxtech	COB-WD-10-1512	479 Typ L5	see part numbers above
Luxtech	COB-WD-17-2420	491 Typ L5	see part numbers above
Luxtech	COB-DN-16-2420	442 Typ L5	see part numbers above
Nichia	NV..S007Z / NF..T012B	452 Typ L5	see part numbers above

Mögliche Halter / COB Kombinationen / Holder / COB combinations LEDiL WINNIE

COB Hersteller COB Supplier	COB Typ COB Type	Halter Holder	Linse Lense
Nichia	NF..S024B / NT..S024B	452 Typ L5	see part numbers above
Nichia	NJ..S024Z	452 Typ L5	see part numbers above
Nichia	NV..L016Z / NV..L024Z	438 Typ L5	see part numbers above
Nichia	NF..L036B / NF..L048B	438 Typ L5	see part numbers above
Nichia	NF..L060B	438 Typ L5	see part numbers above
Nichia	NV..J048Z / NF..J108B	463 Typ L5	see part numbers above
Nichia	NF..J130B	463 Typ L5	see part numbers above
Nichia	NJNWS012Z Tunable	495 Typ L5 HV	see part numbers above
Nichia	NJCWL024Z Tunable	497 Typ L5 HV	see part numbers above
Nichia	NVCWJ024Z Tunable	498 Typ L5 HV	see part numbers above
Philips	Fortimo SLM12xx .. 1215 G7	452 Typ L5	see part numbers above
Philips	Fortimo SLM12xx .. 1619 G7	480 Typ L5	see part numbers above
Philips	Fortimo SLM12xx .. 2024 G7	432 Typ L5	see part numbers above
Philips	Fortimo SLM12xx .. 1313 G7N	434 Typ L5	see part numbers above
Philips	Fortimo SLM12xx .. 1919 G7N	433 Typ L5	see part numbers above
Philips	Fortimo SLM13xx .. 2024 G8 UHE	432 Typ L5	see part numbers above
Philips	Fortimo L06A 1313 G7N Tunable	509 Typ L5	see part numbers above
Philips	Fortimo L09A 1919 G7N Tunable	501 Typ L5	see part numbers above
Prolight Opto	PASB	434 Typ L5	see part numbers above
Prolight Opto	PASQ/PAPQ DimToWarm	434 Typ L5	see part numbers above
Prolight Opto	PDSQ DimToWarm	490 Typ L5	see part numbers above
Prolight Opto	PDSR DimToWarm	432 Typ L5	see part numbers above
Prolight Opto	PDSJ Tunable	442 Typ L5	see part numbers above
Samsung	LC 010C	434 Typ L5	see part numbers above
Samsung	LC 020C / 030C / 040C	477 Typ L5	see part numbers above
Samsung	LC 003D / 006D	434 Typ L5	see part numbers above
Samsung	LC 009D / 013D	434 Typ L5	see part numbers above
Samsung	LC 016D / 019D	477 Typ L5	see part numbers above
Samsung	LC 026D / 033D	477 Typ L5	see part numbers above
Samsung	LC010T Tunable	501 Typ L5	see part numbers above
Samsung	LC020T Tunable	501 Typ L5	see part numbers above
Seoul	SAW* 0661	434 Typ L5	see part numbers above
Seoul	SAW* 1062 / 1063	434 Typ L5	see part numbers above

Mögliche Halter / COB Kombinationen / Holder / COB combinations LEDiL WINNIE

COB Hersteller COB Supplier	COB Typ COB Type	Halter Holder	Linse Lense
Seoul	SAW* 1564 / 1565 / 1566	477 Typ L5	see part numbers above
Tridonic	SLE ADV8 LES 04 / 06	434 Typ L5	see part numbers above
Tridonic	SLE ADV8 LES 09	434 Typ L5	see part numbers above
Tridonic	SLE ADV8 LES 13	433 Typ L5	see part numbers above
Tridonic	SLE ADV8 LES 15	433 Typ L5	see part numbers above
Tridonic	SLE SNC8 LES 06	434 Typ L5	see part numbers above
Tridonic	SLE SNC8 LES 09	434 Typ L5	see part numbers above
Tridonic	SLE SNC8 LES 15	433 Typ L5	see part numbers above
VS Lighting	DMS 102 ***W	434 Typ L5	see part numbers above
VS Lighting	DMS 124 ***W	434 Typ L5	see part numbers above
VS Lighting	DMS 125 / 126 / 128 ***W	433 Typ L5	see part numbers above
VS Lighting	DMS 1208J	433 Typ L5	see part numbers above
VS Lighting	VCA2 122 / 123 / 124	486 Typ L5	see part numbers above
VS Lighting	VCA2 126 / 128	477 Typ L5	see part numbers above
VS Lighting	TW 1914 Tunable	493 Typ L5	see part numbers above
VS Lighting	WU-M-618 DimToWarm	434 Typ L5	see part numbers above
Xicato	XOB 06 (B)	486 Typ L5	see part numbers above
Xicato	XOB 09	434 Typ L5	see part numbers above
Xicato	XOB 14	433 Typ L5	see part numbers above

LEDiL®

ZORYA

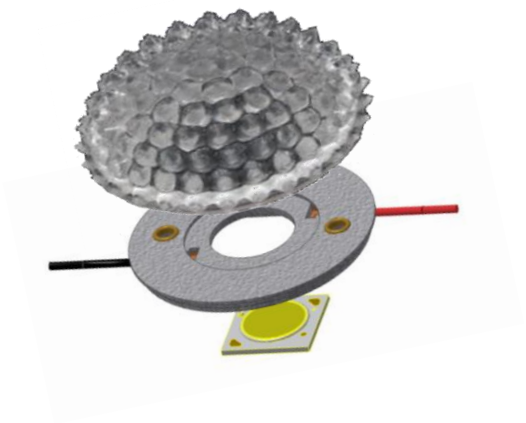

LEDiL Linse
LEDiL lense

F15074_ZORYA-SC

Hersteller Webseite
Manufacturer website

www.ledil.com

LED Halter B+W
LED Holder B+W

4xx / Typ L7

Alternativ zur direkten Montage kann ZORYA auch mit dem Adapter HEKLA montiert werden.
In addition to the direct mounting Zorya can be assembled with the LEDiL HEKLA adaptor

4xx / Typ L7

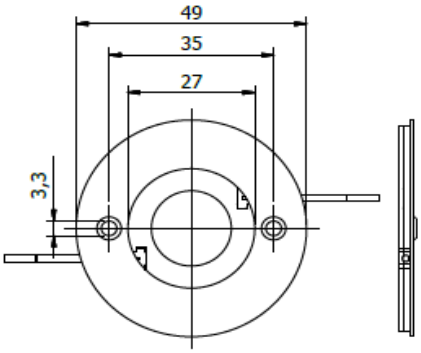

F15074_ZORYA-SC

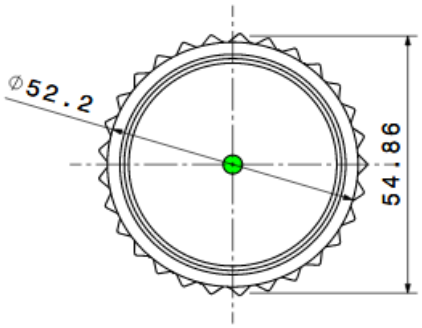

Bottom view

Mögliche Halter / COB Kombinationen / Holder / COB combinations LEDiL ZORYA

COB Hersteller COB Supplier	COB Typ COB Type	Halter Holder	Linse Lense
Bridgelux	V9 HD / V11 HD Gen 7,8	496 Typ L7	F15074_ZORYA-SC
Bridgelux	V10 Gen 7,8,9	486 Typ L7	F15074_ZORYA-SC
Bridgelux	V13 Gen 7,8,9	477 Typ L7	F15074_ZORYA-SC
Bridgelux	V15 Gen 7,8,9	456 Typ L7	F15074_ZORYA-SC
Bridgelux	V18 Gen 7,8,9	462 Typ L7	F15074_ZORYA-SC
Bridgelux	V22 Gen 7,8,9	431 Typ L7	F15074_ZORYA-SC
Bridgelux	Vesta DTW 13/15mm Gen 1,2	491 Typ L7	F15074_ZORYA-SC
Bridgelux	Vesta DTW 18mm Gen 1	505 Typ L7	F15074_ZORYA-SC
Bridgelux	Vesta Tunable 9mm Gen 2	489 Typ L7	F15074_ZORYA-SC
Bridgelux	Vesta Tunable 13mm Gen 2	492 Typ L7	F15074_ZORYA-SC
Bridgelux	Vesta Tunable 15mm Gen 2	482 Typ L7	F15074_ZORYA-SC
Bridgelux	Vesta Tunable 18mm Gen 2	483 Typ L7	F15074_ZORYA-SC

Mögliche Halter / COB Kombinationen / Holder / COB combinations LEDiL ZORYA

COB Hersteller COB Supplier	COB Typ COB Type	Halter Holder	Linse Lense
Bridgelux	Vesta Tunable 22mm Gen 2	494 Typ L7	F15074_ZORYA-SC
Citizen	CLU 028 / 02J / 02Q	434 Typ L7	F15074_ZORYA-SC
Citizen	CLU 038 / 03H / 03J / 03Q	433 Typ L7	F15074_ZORYA-SC
Citizen	CLU 048 / 04H / 04J / 04Q	431 Typ L7	F15074_ZORYA-SC
Citizen	CLU 723	477 Typ L7	F15074_ZORYA-SC
Citizen	CLU 733	471 Typ L7	F15074_ZORYA-SC
Citizen	LCN-C01B2 / C02B2 Tunable	481 Typ L7	F15074_ZORYA-SC
Citizen	LCN-C04B2 / C05B2 Tunable	481 Typ L7	F15074_ZORYA-SC
CREE	CMA 1516	441 Typ L7	F15074_ZORYA-SC
CREE	CMA 1825 / 1840	437 Typ L7	F15074_ZORYA-SC
CREE	CMA 2550	439 Typ L7	F15074_ZORYA-SC
CREE	CMA 3090	447 Typ L7	F15074_ZORYA-SC
CREE	CMB 1507 / 1510 / 1516	441 Typ L7	F15074_ZORYA-SC
CREE	CMB 1818 / 1825	437 Typ L7	F15074_ZORYA-SC
CREE	CMB 1840	457 Typ L7	F15074_ZORYA-SC
CREE	CMB 2550	439 Typ L7	F15074_ZORYA-SC
CREE	CMB 3090	447 Typ L7	F15074_ZORYA-SC
CREE	CMT 1407 / 1412 / 1420	434 Typ L7	F15074_ZORYA-SC
CREE	CMT 1922 / 1925 / 1930 / 1945	477 Typ L7	F15074_ZORYA-SC
CREE	CMT 2850 / 2870 / 2890	471 Typ L7	F15074_ZORYA-SC
CREE	CMU 1003 / 1006 / 1010 / 1013	434 Typ L7	F15074_ZORYA-SC
CREE	CMU 1516 / 1519 / 1526 / 1532	433 Typ L7	F15074_ZORYA-SC
CREE	CMU 2236 / 2239 / 2258 / 2287	471 Typ L7	F15074_ZORYA-SC
CREE	CXB 1507 / 1512 / 1520	441 Typ L7	F15074_ZORYA-SC
CREE	CXB 1816 / 1820	437 Typ L7	F15074_ZORYA-SC
CREE	CXB 1830	457 Typ L7	F15074_ZORYA-SC
CREE	CXB 2530 / 2540	439 Typ L7	F15074_ZORYA-SC
CREE	CXB 3050 / 3070	447 Typ L7	F15074_ZORYA-SC
Edison	2PHE 03 / 06 / 09 / 13	434 Typ L7	F15074_ZORYA-SC
Edison	2PHE 15 / 18 / 24 / 30	433 Typ L7	F15074_ZORYA-SC
Edison	2PHE 55 / 60 / 83	431 Typ L7	F15074_ZORYA-SC
Lextar	PB 06 / 09 / 13	434 Typ L7	F15074_ZORYA-SC
Lextar	PB 16 / 19 / 26	433 Typ L7	F15074_ZORYA-SC

Mögliche Halter / COB Kombinationen / Holder / COB combinations LEDiL ZORYA

COB Hersteller COB Supplier	COB Typ COB Type	Halter Holder	Linse Lense
Lextar	PB 38 / 54	431 Typ L7	F15074_ZORYA-SC
Lumileds	Luxeon 1202 / 1203 / 1204HD	480 Typ L7	F15074_ZORYA-SC
Lumileds	Luxeon 1205HD	480 Typ L7	F15074_ZORYA-SC
Lumileds	Luxeon 1204 / 1205	432 Typ L7	F15074_ZORYA-SC
Lumileds	Luxeon 1208 / 1210	432 Typ L7	F15074_ZORYA-SC
Lumileds	Luxeon 1211	431 Typ L7	F15074_ZORYA-SC
Lumileds	Luxeon 1213 / 1216 / 1812 / 1816	431 Typ L7	F15074_ZORYA-SC
Lumileds	CS COB L02 / L04	434 Typ L7	F15074_ZORYA-SC
Lumileds	CS COB L06 / L08 / L10	433 Typ L7	F15074_ZORYA-SC
Lumileds	CS COB L11 / L13 / L16	431 Typ L7	F15074_ZORYA-SC
Lumileds	CS COB R12 / R18	431 Typ L7	F15074_ZORYA-SC
Lumileds	CX Plus HD S04H9	4xx Typ L7	F15074_ZORYA-SC
Lumileds	CX Plus M02Fx / M03Fx	441 Typ L7	F15074_ZORYA-SC
Lumileds	CX Plus L04Fx / L05Fx / L08Fx	437 Typ L7	F15074_ZORYA-SC
Luminus	CIM/CLM/CXM-9-xC	434 Typ L7	F15074_ZORYA-SC
Luminus	CLM/CXM-9-xA	461 Typ L7	F15074_ZORYA-SC
Luminus	CHM-9-BH	433 Typ L7	F15074_ZORYA-SC
Luminus	CXM-11-xC	433 Typ L7	F15074_ZORYA-SC
Luminus	CGM/CIM/CLM/CXM-14-xC	433 Typ L7	F15074_ZORYA-SC
Luminus	CVM/CXM-18	453 Typ L7	F15074_ZORYA-SC
Luminus	CXM-18 Gen6	431 Typ L7	F15074_ZORYA-SC
Luminus	CGM/CIM/CLM/CXM-22-xC	431 Typ L7	F15074_ZORYA-SC
Luminus	CDM-9 Gen2 DtW	491 Typ L7	F15074_ZORYA-SC
Luminus	CDM-14/CDM-18 DtW	491 Typ L7	F15074_ZORYA-SC
Luminus	CTM-14 TW	442 Typ L7	F15074_ZORYA-SC
Luminus	CTM-14 RGBW	500 Typ L7	F15074_ZORYA-SC
Luminus	CTM-18 Gen1 TW	442 Typ L7	F15074_ZORYA-SC
Luminus	CTM-18 Gen2 TW	483 Typ L7	F15074_ZORYA-SC
Luminus	CTM-22 TW	494 Typ L7	F15074_ZORYA-SC
Luxtech	COB-WD-17-2420	491 Typ L7	F15074_ZORYA-SC
Luxtech	COB-DN-16-2420	442 Typ L7	F15074_ZORYA-SC
Nichia	NV..L016Z / NV..L024Z	438 Typ L7	F15074_ZORYA-SC
Nichia	NF..L036B / NF..L048B	438 Typ L7	F15074_ZORYA-SC

Mögliche Halter / COB Kombinationen / Holder / COB combinations LEDiL ZORYA

COB Hersteller COB Supplier	COB Typ COB Type	Halter Holder	Linse Lense
Nichia	NF..L060B	438 Typ L7	F15074_ZORYA-SC
Nichia	NV..J048Z / NF..J108B	463 Typ L7	F15074_ZORYA-SC
Nichia	NF..J130B	463 Typ L7	F15074_ZORYA-SC
Nichia	NVCWJ024Z Tunable	498 Typ L7 HV	F15074_ZORYA-SC
Philips	Fortimo SLM12xx .. 1619 G7	480 Typ L7	F15074_ZORYA-SC
Philips	Fortimo SLM12xx .. 2024 G7	432 Typ L7	F15074_ZORYA-SC
Philips	Fortimo SLM12xx .. 2828 G7	431 Typ L7	F15074_ZORYA-SC
Philips	Fortimo SLM12xx .. 1313 G7N	434 Typ L7	F15074_ZORYA-SC
Philips	Fortimo SLM12xx .. 1919 G7N	433 Typ L7	F15074_ZORYA-SC
Philips	Fortimo SLM12xx .. 2828 G7N	431 Typ L7	F15074_ZORYA-SC
Philips	Fortimo SLM13xx .. 2024 G8 UHE	432 Typ L7	F15074_ZORYA-SC
Philips	Fortimo SLM13xx .. 2828 G8 UHE	431 Typ L7	F15074_ZORYA-SC
Philips	Fortimo L09A 1919 G7N Tunable	501 Typ L7	F15074_ZORYA-SC
Prolight Opto	PASB	434 Typ L7	F15074_ZORYA-SC
Prolight Opto	PASQ/PAPQ DimToWarm	434 Typ L7	F15074_ZORYA-SC
Prolight Opto	PDSR DimToWarm	432 Typ L7	F15074_ZORYA-SC
Prolight Opto	PDSJ Tunable	442 Typ L7	F15074_ZORYA-SC
Samsung	LC 020C / 030C / 040C	477 Typ L7	F15074_ZORYA-SC
Samsung	LC 003D / 006D	434 Typ L7	F15074_ZORYA-SC
Samsung	LC 009D / 013D	434 Typ L7	F15074_ZORYA-SC
Samsung	LC 016D / 019D	477 Typ L7	F15074_ZORYA-SC
Samsung	LC 026D / 033D	477 Typ L7	F15074_ZORYA-SC
Samsung	LC 040D / 060D / 080D	431 Typ L7	F15074_ZORYA-SC
Samsung	LC010T Tunable	501 Typ L7	F15074_ZORYA-SC
Samsung	LC020T Tunable	501 Typ L7	F15074_ZORYA-SC
Samsung	LC035T Tunable	502 Typ L7	F15074_ZORYA-SC
Seoul	SAW* 1062 / 1063	434 Typ L7	F15074_ZORYA-SC
Seoul	SAW* 1564 / 1565 / 1566	477 Typ L7	F15074_ZORYA-SC
Seoul	SAW* 22AA / 2296	431 Typ L7	F15074_ZORYA-SC
Seoul	SAW* 2298 / 226A	431 Typ L7	F15074_ZORYA-SC
Tridonic	SLE ADV8 LES 04 / 06	434 Typ L7	F15074_ZORYA-SC
Tridonic	SLE ADV8 LES 09	434 Typ L7	F15074_ZORYA-SC

Mögliche Halter / COB Kombinationen / Holder / COB combinations LEDiL ZORYA

COB Hersteller COB Supplier	COB Typ COB Type	Halter Holder	Linse Lense
Tridonic	SLE ADV8 LES 13	433 Typ L7	F15074_ZORYA-SC
Tridonic	SLE ADV8 LES 15	433 Typ L7	F15074_ZORYA-SC
Tridonic	SLE SNC8 LES 09	434 Typ L7	F15074_ZORYA-SC
Tridonic	SLE SNC8 LES 15	433 Typ L7	F15074_ZORYA-SC
VS Lighting	DMS 124 ***W	434 Typ L7	F15074_ZORYA-SC
VS Lighting	DMS 125 / 126 / 128 ***W	433 Typ L7	F15074_ZORYA-SC
VS Lighting	DMS 120 ***W	431 Typ L7	F15074_ZORYA-SC
VS Lighting	DMS 12C / 18B ***W	431 Typ L7	F15074_ZORYA-SC
VS Lighting	DMS 1208J	433 Typ L7	F15074_ZORYA-SC
VS Lighting	DMS 1212J / 1812J	431 Typ L7	F15074_ZORYA-SC
VS Lighting	VCA2 122 / 123 / 124	486 Typ L7	F15074_ZORYA-SC
VS Lighting	VCA2 126 / 128	477 Typ L7	F15074_ZORYA-SC
VS Lighting	VCA2 1211 / 1213	471 Typ L7	F15074_ZORYA-SC
VS Lighting	TW 1914 Tunable	493 Typ L7	F15074_ZORYA-SC
VS Lighting	TW 2820 Tunable	494 Typ L7	F15074_ZORYA-SC
VS Lighting	WU-M-618 DimToWarm	434 Typ L7	F15074_ZORYA-SC
Xicato	XOB 09	434 Typ L7	F15074_ZORYA-SC
Xicato	XOB 14	433 Typ L7	F15074_ZORYA-SC
Xicato	XOB 23	431 Typ L7	F15074_ZORYA-SC

Zhaga

Buch 3 kompatibler Halter
Book 3 compatible holder

Zhaga Webseite Zhaga website	www.zhagastandard.org	**Zertifikate / certificates**
LED Halter B+W LED Holder B+W	4xx / Typ Z1	**Ausweis-Nr.** 40041342 **File** E47294

Unsere Halter 4xx Typ Z1 entsprechen mit dem Aussendurchmesser und den Befestigungspunkten den Vorgaben von Zhaga Buch 3, aber durch die extrem flache Bauweise können sie nicht zertifziert werden.

The shape and fixing points holders of our holders 4xx Type Z1 are compatible to Zhaga Book 3, but due to the thin design they cannot be certified.

4xx / Typ Z1

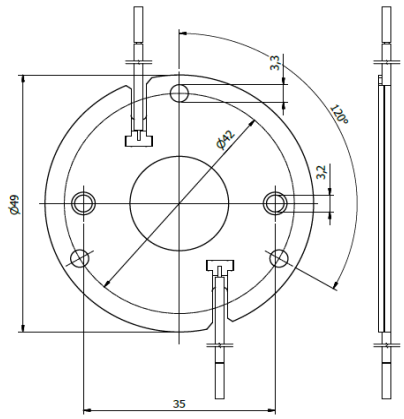

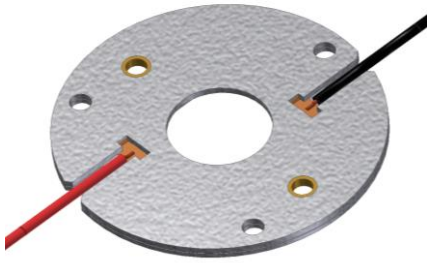

verfügbare Halter / available Holder

COB Hersteller COB Supplier	COB Typ COB Type	Halter Holder
Bridgelux	V3 HD / V4 HD Gen 7,8	460 Typ Z1
Bridgelux	V6 HD Gen 7,8	464 Typ Z1
Bridgelux	V9 HD / V11 HD Gen 7,8	496 Typ Z1
Bridgelux	V6 Gen 8,9 (just 2 pads!)	460 Typ Z1
Bridgelux	V8 Gen 7,8,9 (4 pads)	460 Typ Z1
Bridgelux	V10 Gen 7,8,9	486 Typ Z1
Bridgelux	V13 Gen 7,8,9	477 Typ Z1
Bridgelux	V15 Gen 7,8,9	456 Typ Z1
Bridgelux	V18 Gen 7,8,9	462 Typ Z1
Bridgelux	V22 Gen 7,8,9	431 Typ Z1
Bridgelux	Vesta DTW 6/9mm Gen 1,2	490 Typ Z1

verfügbare Halter / available Holder

COB Hersteller COB Supplier	COB Typ COB Type	Halter Holder
Bridgelux	Vesta DTW 13/15mm Gen 1,2	491 Typ Z1
Bridgelux	Vesta DTW 18mm Gen 1	505 Typ Z1
Bridgelux	Vesta Tunable 6mm Gen 2	504 Typ Z1
Bridgelux	Vesta Tunable 9mm Gen 2	489 Typ Z1
Bridgelux	Vesta Tunable 13mm Gen 2	492 Typ Z1
Bridgelux	Vesta Tunable 15mm Gen 2	482 Typ Z1
Bridgelux	Vesta Tunable 18mm Gen 2	483 Typ Z1
Bridgelux	Vesta Tunable 22mm Gen 2	494 Typ Z1
Citizen	CLU 028 / 02J / 02Q	434 Typ Z1
Citizen	CLU 038 / 03H / 03J / 03Q	433 Typ Z1
Citizen	CLU 048 / 04H / 04J / 04Q	431 Typ Z1
Citizen	CLU 702 / 703 / 7A2 /7A3 / 7B2	434 Typ Z1
Citizen	CLU 712 / 713	477 Typ Z1
Citizen	CLU 723	477 Typ Z1
Citizen	CLU 733	471 Typ Z1
Citizen	LCN-C01B2 / C02B2 Tunable	481 Typ Z1
Citizen	LCN-C04B2 / C05B2 Tunable	481 Typ Z1
CREE	CHA 0825	433 Typ Z1
CREE	CMA 1303 / 1306	448 Typ Z1
CREE	CMA 1516	441 Typ Z1
CREE	CMA 1825 / 1840	437 Typ Z1
CREE	CMA 2550	439 Typ Z1
CREE	CMA 3090	447 Typ Z1
CREE	CMB 1304 / 1306	448 Typ Z1
CREE	CMB 1507 / 1510 / 1516	441 Typ Z1
CREE	CMB 1818 / 1825	437 Typ Z1
CREE	CMB 1840	457 Typ Z1
CREE	CMB 2550	439 Typ Z1
CREE	CMB 3090	447 Typ Z1
CREE	CMT 1407 / 1412 / 1420	434 Typ Z1
CREE	CMT 1922 / 1925 / 1930 / 1945	477 Typ Z1
CREE	CMT 2850 / 2870 / 2890	471 Typ Z1
CREE	CMU 1003 / 1006 / 1010 / 1013	434 Typ Z1
CREE	CMU 1516 / 1519 / 1526 / 1532	433 Typ Z1
CREE	CMU 2236 / 2239 / 2258 / 2287	471 Typ Z1

verfügbare Halter / available Holder

COB Hersteller COB Supplier	COB Typ COB Type	Halter Holder
CREE	CXB 1304 / 1310	448 Typ Z1
CREE	CXB 1507 / 1512 / 1520	441 Typ Z1
CREE	CXB 1816 / 1820	437 Typ Z1
CREE	CXB 1830	457 Typ Z1
CREE	CXB 2530 / 2540	439 Typ Z1
CREE	CXB 3050 / 3070	447 Typ Z1
Edison	2PHE 03 / 06 / 09 / 13	434 Typ Z1
Edison	2PHE 15 / 18 / 24 / 30	433 Typ Z1
Edison	2PHE 55 / 60 / 83	431 Typ Z1
Lextar	PB 06 / 09 / 13	434 Typ Z1
Lextar	PB 16 / 19 / 26	433 Typ Z1
Lextar	PB 38 / 54	431 Typ Z1
Lumileds	Luxeon 1202s / 1202HD	452 Typ Z1
Lumileds	Luxeon 1202 / 1203 / 1204HD	480 Typ Z1
Lumileds	Luxeon 1205HD	480 Typ Z1
Lumileds	Luxeon 1204 / 1205	432 Typ Z1
Lumileds	Luxeon 1208 / 1210	432 Typ Z1
Lumileds	Luxeon 1211	431 Typ Z1
Lumileds	Luxeon 1213 / 1216 / 1812 / 1816	431 Typ Z1
Lumileds	CS COB L02 / L04	434 Typ Z1
Lumileds	CS COB L06 / L08 / L10	433 Typ Z1
Lumileds	CS COB L11 / L13 / L16	431 Typ Z1
Lumileds	CS COB R12 / R18	431 Typ Z1
Lumileds	CX Plus HD S01H4, S0xH6	448 Typ Z1
Lumileds	CX Plus HD S04H9	4xx Typ Z1
Lumileds	CX Plus S01Fx / S02Fx	448 Typ Z1
Lumileds	CX Plus M02Fx / M03Fx	441 Typ Z1
Lumileds	CX Plus L04Fx / L05Fx / L08Fx	437 Typ Z1
Luminus	CHM-4-BH / CXM-4-xC	434 Typ Z1
Luminus	CHM-6-BH / CXM-6-xC	434 Typ Z1
Luminus	CIM/CLM/CXM-9-xC	434 Typ Z1
Luminus	CLM/CXM-9-xA	461 Typ Z1
Luminus	CHM-9-BH	433 Typ Z1

verfügbare Halter / available Holder		
COB Hersteller COB Supplier	**COB Typ** COB Type	**Halter** Holder
Luminus	CXM-11-xC	433 Typ Z1
Luminus	CGM/CIM/CLM/CXM-14-xC	433 Typ Z1
Luminus	CVM/CXM-18	453 Typ Z1
Luminus	CXM-18 Gen6	431 Typ Z1
Luminus	CGM/CIM/CLM/CXM-22-xC	431 Typ Z1
Luminus	CDM-6 / CDM-9Gen1 DtW	490 Typ Z1
Luminus	CDM-9 Gen2 DtW	491 Typ Z1
Luminus	CDM-14/CDM-18 DtW	491 Typ Z1
Luminus	CTM-6 / CTM-9 TW	495 Typ Z1
Luminus	CTM-14 TW	442 Typ Z1
Luminus	CTM-14 RGBW	500 Typ Z1
Luminus	CTM-18 Gen1 TW	442 Typ Z1
Luminus	CTM-18 Gen2 TW	483 Typ Z1
Luminus	CTM-22 TW	494 Typ Z1
Luxtech	COB-WD-10-1512	479 Typ Z1
Luxtech	COB-WD-17-2420	491 Typ Z1
Luxtech	COB-DN-16-2420	442 Typ Z1
Nichia	NV..S007Z / NF..T012B	452 Typ Z1
Nichia	NF..S024B / NT..S024B	452 Typ Z1
Nichia	NJ..S024Z	452 Typ Z1
Nichia	NV..L016Z / NV..L024Z	438 Typ Z1
Nichia	NF..L036B / NF..L048B	438 Typ Z1
Nichia	NF..L060B	438 Typ Z1
Nichia	NV..J048Z / NF..J108B	463 Typ Z1
Nichia	NF..J130B	463 Typ Z1
Nichia	NJNWS012Z Tunable	495 Typ Z1 HV
Nichia	NJCWL024Z Tunable	497 Typ Z1 HV
Nichia	NVCWJ024Z Tunable	498 Typ Z1 HV
Philips	Fortimo SLM12xx .. 1215 G7	452 Typ Z1
Philips	Fortimo SLM12xx .. 1619 G7	480 Typ Z1
Philips	Fortimo SLM12xx .. 2024 G7	432 Typ Z1
Philips	Fortimo SLM12xx .. 2828 G7	431 Typ Z1
Philips	Fortimo SLM12xx .. 1313 G7N	434 Typ Z1
Philips	Fortimo SLM12xx .. 1919 G7N	433 Typ Z1

verfügbare Halter / available Holder

COB Hersteller COB Supplier	COB Typ COB Type	Halter Holder
Philips	Fortimo SLM12xx .. 2828 G7N	431 Typ Z1
Philips	Fortimo SLM13xx .. 2024 G8 UHE	432 Typ Z1
Philips	Fortimo SLM13xx .. 2828 G8 UHE	431 Typ Z1
Philips	Fortimo L06A 1313 G7N Tunable	509 Typ Z1
Philips	Fortimo L09A 1919 G7N Tunable	501 Typ Z1
Prolight Opto	PASB	434 Typ Z1
Prolight Opto	PASQ/PAPQ DimToWarm	434 Typ Z1
Prolight Opto	PDSQ DimToWarm	490 Typ Z1
Prolight Opto	PDSR DimToWarm	432 Typ Z1
Prolight Opto	PDSJ Tunable	442 Typ Z1
Samsung	LC 010C	434 Typ Z1
Samsung	LC 020C / 030C / 040C	477 Typ Z1
Samsung	LC 003D / 006D	434 Typ Z1
Samsung	LC 009D / 013D	434 Typ Z1
Samsung	LC 016D / 019D	477 Typ Z1
Samsung	LC 026D / 033D	477 Typ Z1
Samsung	LC 040D / 060D / 080D	431 Typ Z1
Samsung	LC010T Tunable	501 Typ Z1
Samsung	LC020T Tunable	501 Typ Z1
Samsung	LC035T Tunable	502 Typ Z1
Seoul	SAW* 0661	434 Typ Z1
Seoul	SAW* 1062 / 1063	434 Typ Z1
Seoul	SAW* 1564 / 1565 / 1566	477 Typ Z1
Seoul	SAW* 22AA / 2296	431 Typ Z1
Seoul	SAW* 2298 / 226A	431 Typ Z1
Tridonic	SLE ADV8 LES 04 / 06	434 Typ Z1
Tridonic	SLE ADV8 LES 09	434 Typ Z1
Tridonic	SLE ADV8 LES 13	433 Typ Z1
Tridonic	SLE ADV8 LES 15	433 Typ Z1
Tridonic	SLE SNC8 LES 06	434 Typ Z1
Tridonic	SLE SNC8 LES 09	434 Typ Z1
Tridonic	SLE SNC8 LES 15	433 Typ Z1

verfügbare Halter / available Holder

COB Hersteller COB Supplier	COB Typ COB Type	Halter Holder
VS Lighting	DMS 102 ***W	434 Typ Z1
VS Lighting	DMS 124 ***W	434 Typ Z1
VS Lighting	DMS 125 / 126 / 128 ***W	433 Typ Z1
VS Lighting	DMS 120 ***W	431 Typ Z1
VS Lighting	DMS 12C / 18B ***W	431 Typ Z1
VS Lighting	DMS 1208J	433 Typ Z1
VS Lighting	DMS 1212J / 1812J	431 Typ Z1
VS Lighting	VCA 042	486 Typ Z1
VS Lighting	VCA2 122 / 123 / 124	486 Typ Z1
VS Lighting	VCA2 126 / 128	477 Typ Z1
VS Lighting	VCA2 1211 / 1213	471 Typ Z1
VS Lighting	TW 1914 Tunable	493 Typ Z1
VS Lighting	TW 2820 Tunable	494 Typ Z1
VS Lighting	WU-M-618 DimToWarm	434 Typ Z1
Xicato	XOB 04	486 Typ Z1
Xicato	XOB 06 (B)	486 Typ Z1
Xicato	XOB 09	434 Typ Z1
Xicato	XOB 14	433 Typ Z1
Xicato	XOB 23	431 Typ Z1

Wir helfen Ihnen gerne weiter.
Sprechen Sie uns einfach an!

Please don´t hesitate to contact us
for any further questions.

BENDER
+WIRTH

Ihr Kontakt:
Your contact:

Michael Kritzler
Head of Engineering
+49 (0) 2359 / 669 - 184
kritzler@bender-wirth.de

Bender + Wirth GmbH & Co.
D-58566 Kierspe, Germany
+49 (2359) / 669 - 0
sales@bender-wirth.de
www.bender-wirth.de