浙江宝龙机电有限公司
ZHEJIANG BAOLONG M&E CO.,LTD.

承认书
APPROVAL SHEET

版本号：A0

客户信息	客户名称 Customer	
	客户代码 Customer Code	
	项目名称 Project Name	
	料号 Part Number	
	客户承认签章 Customer Approval & Signatures	

宝龙机电	产品名称 Product Name		扁平振动马达 Coin vibration motor			
	产品型号 Product Model		BVM0827-X10-1T03U			
	设计 Design	钱浩 Qianhao	审核 Check	刘勇强 Liu YongQiang	批准 Approval	兰德福 Lan Defu

地址:中国浙江省乐清市宁康东路 388 号
ADD:No.388, Ningkang East Road, Yueqing City, Zhejiang Province, China
邮政编码/POST CODE：325600
电话/PHONE：0577-62578888
传真/FAX：0577-62574811
邮箱/E-mail：BLJSB@BAOLONG.COM

ZHEJIANG BAOLONG M&E CO.LTD

- 目录/List -

封面/Cover---------- 1

目录/Contents---------- 2

更改记录/ Revision History---------- 3

1. 适用范围/Scope Of Application---------- 4

2. 使用条件/Standard Operating Condition---------- 4

3. 测试条件/Testing Condition---------- 5

4. 电气特性/Electrical Characteristic---------- 5

5. 机械特性/Mechanical Characteristics---------- 6

6. 环境试验/Environmental Test---------- 7

7. 寿命试验/Life Test---------- 9

8. 环保要求/Environment Protections---------- 10

9. 注意事项/Caution---------- 11

10. 附/Attached---------- 12

10-1 马达特性图/Characteristic Graph Of Motor---------- 12

10-2 标准测量方式/State Of Standard Measurement---------- 12

11. 外形图/Outside View---------- 13

12. 结构图及物料清单/Structure Drawing & BOM---------- 14

13. 包装/Packaging---------- 15

ZHEJIANG BAOLONG M&E CO LTD

更改记录/ Revision History				
版本 Version	编制 Prepare	批准 Approval	更改详情 Detail spec changes	日期 Date
A0	钱浩	兰德福	初始规格/Preliminary spec	2021-4-28

ZHEJIANG BAOLONG M&E CO LTD

1.适用范围/Scope Of Application

本规格书适用于浙江宝龙机电有限公司制造的应用于移动电话的振动电机。
This datasheet is stipulated for vibration motor, which is manufactured by Zhejiang Baolong M&E Co., Ltd.for mobile phone.

型号名称标准/Standard of model name:

BVM 0827

→尺寸规格/Size Spec.:Φ08, 2.7t(例如/For Example 1227:Φ12,2.7t etc.)

→宝龙振动马达/BAOLONG VIBRATION MOTOR

2.使用条件/Standard Operating Condition

NO.	项目/Item	规格/Specifications
2-1	额定电压 Rated voltage	DC3.0V
2-2	使用电压范围 Operating voltage range	DC 2.5~3.5V
2-3	旋转方向 Rotating direction	CW / CCW
2-4	使用温度范围 Operating temperature range	-30℃~+70℃
2-5	保存环境范围 Storage temperature range	-40℃~+80℃

ZHEJIANG BAOLONG M&E CO.LTD

3.测试条件/Testing Condition

NO.	项目/Item	规格/Specifications
3-1	温度 Temperature	25℃±3
3-2	湿度 Humidity	45% ~85%RH
3-3	电源电压 Power supply, voltage source	直流电源或电池 3.0V DC power supply or battery 3.0V
3-4	马达安放状态 Posture of motor	标准测量方式 State of standard measurement

4.电气特性/Electrical Characteristic

NO.	项目/Item	单位 /Unit	规格/SPEC.	条件/Condition
4-1	额定转速 Rated speed	rpm	13500±3500	额定电压:DC 3.0V Rated voltage:DC 3.0V
4-2	额定电流 Rated current	mA	85Max	额定电压:DC 3.0V Rated voltage:DC 3.0V
4-3	启动电压 Starting voltage	V	2.3Max	DC2.3V电压下，开/关为1个循环，共3个循环 On/off-1cycle,total 3cycles under DC2.3V
4-4	端子阻抗 Terminal resistance	Ω	相接触/ Phase contact: 30±20%	正极和负极之间 Between positive and negative
			相串联/ Phase senrial: 60±20%	
			相并联/ Phase parallel: 15±20%	
4-5	启动电流 Starting current	mA	120Max	启动电压:DC 2.3Max Starting voltage:DC 2.3Max
4-6	绝缘电阻 Insulationresistance	MΩ	10Min	测量机壳和引线之间。 测试电压直流100V。 Measuring between case and lead wire.Test voltage DC 100V

ZHEJIANG BAOLONG M&E CO LTD

5.机械特性/Mechanical Characteristics

NO	项目/Item	单位 /Unit	规格 /Spec	条件/Condition
5-1	振动量 Vibration Strength	Grms	0.5 Min	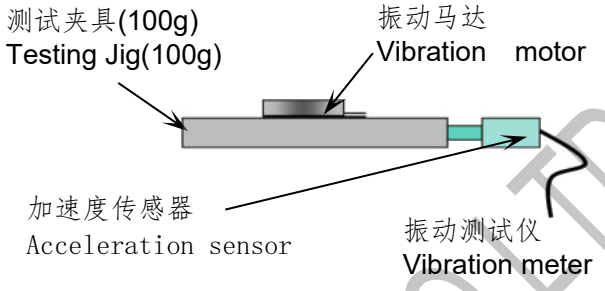 马达：被固定/Motor : be fixed. 额定电压:DC 3.0V/Rated voltage : DC 3.0V .
		Gp	0.7Min	
5-2	机械噪音 Mechanical Noise	dB	50 Max	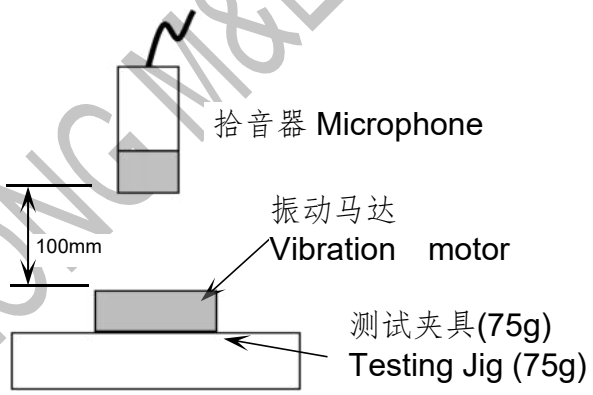 马达：被固定/Motor : be fixed 额定电压:DC 3.0V/Rated voltage : DC 3.0 V 背景噪音： 25dB Max. Back ground noise: 25dB Max. 拾音器沿轴向正对电机平面 Microphone faces the plane of motor along the shaft

ZHEJIANG BAOLONG M&E CO LTD

6.环境试验/Environmental Test

NO	项目/Item	条件/Condition
6-1	低温贮存试验 Low temperature Storage test	在-40℃的环境下放置96小时，然后在常温常湿下恢复2小时后测试。 Exposed at -40℃ for 96hours, then return to normal temperature and humidity for 2 hours before test.
6-2	高温贮存试验 High temperature Storage test	在+80℃的环境下放置96小时，然后在常温常湿下恢复2小时后测试。 Exposed at +80℃ for 96hours, then return to normal temperature and humidity for 2 hours before test.
6-3	高湿贮存试验 High humidity Storage test	在+40℃,90%RH的环境下放置96小时，然后在常温常湿下恢复2h后测试。 Exposed at +40℃ 90%RH for 96hours, then return to normal temperature and humidity for 2 hours before test.
6-4	温冲试验 Thermal shock test	马达按照以下试验条件放置 15 个周期，然后在常温常湿下放置 2 小时后测试。 Confirmed to operating of motor during 15 cycles as following test condition, then return to normal temperature and humidity for 2 hours before test. 试验条件/Test condition: 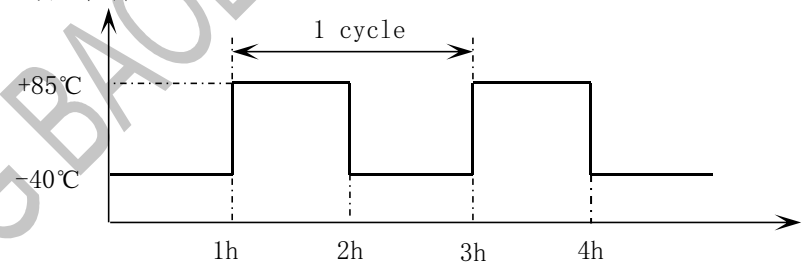 高低温转换时间：≤5分钟 Transfer time between high temperature and low temperature:≤5min
6-5	跌落 Drop test	将马达固定在100g的塑料夹具上，从1.5米的高度跌落到水泥地面上，六个面的每个面都跌落2次。 The motor that is attached to a 100g jig (plastic housing) and drop it onto the concrete floor from 1.5m height. Drop twice in each of the six planes.

ZHEJIANG BAOLONG M&E CO LTD

6-6	振动试验 Vibration test	将马达固定在100g的塑料夹具上，按以下要求进行试验： 1)振频范围:10-55Hz 2)全振幅1.5mm 3)振频变化10-55-10 约10分钟 4)振动方向:三个垂直方向 5)持续时间:每个方向10分钟（共30分钟） The motor that is attached to a 100g jig (plastic housing) and test according following condition: 1)Vibration frequency range: 10~55Hz 2)Total amplitude: 1.5mm 3)Sweep ratio: 10~55~10Hz approximate 10min 4)Direction of vibration: Three perpendicular directions 5)Duration: 10min(30min in total)

► 判定标准/Judgment standard

ⓐ试验后，测试数据必须符合以下规格：

After test, measured data must be satisfied as following specifications;

- 启动电压: DC2.3V Max.
- Starting voltage: DC2.3V Max.
- 额定转速: 变化率在初始值的-30%~+50%以内。
- Rated speed: changing rate must be within -30%~+50% of initial value.
- 额定电流: 变化率在初始值的-30%~+50%以内。
- Rated current: changing rate must be within -30%~+50% of initial value.
- 端子阻抗: 变化率在初始值的±15%以内。
- Terminal resistance: changing rate must be within ±15% of initial value.

ⓑ外形结构无异常.

There should be no abnormalities in appearance and structure.

ZHEJIANG BAOLONG M&E CO.LTD

7.寿命试验/Life Test

试验条件/Test condition:

1 秒转，1 秒停为 1 个周期，共 100000 次。
(DC3.0V，常温常湿)
1 SEC ON, 1SEC OFF 1CYCLE , 100000CYCLES.
(DC3.0V, at normal temperature and humidity)
允许出现 3 次可恢复性振动
3 recoverable vibrations are allowed

判定条件/Judgment standard:

试验后，测试数据必须符合以下规格：
After test, measured data must be satisfied as following specifications;

- 启动电压: DC2.3V Max.
- Starting voltage: DC2.3V Max.
- 额定转速: 变化率在初始值的-30%~+50%以内。
- Rated speed: changing rate must be within -30%~+50% of initial value.
- 额定电流: 变化率在初始值的-30%~+50%以内。
- Rated current: changing rate must be within -30%~+50%of initial value.

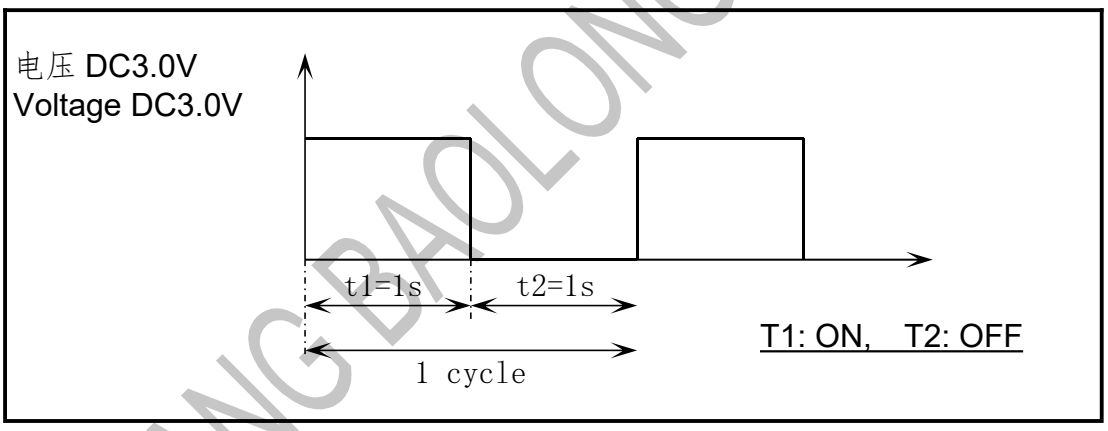

ZHEJIANG BAOLONG M&E CO LTD

8.环保要求/Environment Protections

本产品所有零部件符合欧盟RoHS指令（2011/65/EU,(EU)2015/863）/无卤/REACH指令要求，具体环境有害物质管控限制如下/This product conforms to the EU ROHS（2011/65/EU,(EU)2015/863），Halogen-Free and REACH certification,Specific content as follows:

铅及其化合物最大允许含量为1000ppm/Lead and Lead compounds≤1000ppm

镉及其化合物最大允许含量为100ppm/Cadmium and cadmium compounds≤100ppm

汞及其化合物最大允许含量为1000ppm/Mercury and Mercury compounds≤1000ppm

六价铬化物最大允许含量为1000ppm/Hexavalent chromium compounds≤1000ppm

多溴联苯(PBB)最大允许含量为1000ppm/Polybrominated biphenylethers≤1000ppm

多溴联苯醚(PBDE)最大允许含量为1000ppm/Polybrominated diphenylethers≤1000ppm

邻苯二甲酸二异丁酯（DIBP）最大允许含量为1000ppm /DIBP≤1000ppm

邻苯二甲酸二丁酯(DBP)最大允许含量为1000ppm /DBP≤1000ppm

邻苯二甲酸苄基酯(BBP)最大允许含量为1000ppm/BBP≤1000ppm

邻苯二甲酸二（2-乙基已基）酯(DEHP)最大允许含量为1000ppm/DEHP≤1000ppm

六溴环十二烷(HBCDD)最大允许含量为1000ppm/HBCDD≤1000ppm

溴Br最大允许含量为900ppm/Br≤900ppm

氯Cl最大允许含量为900ppm/Cl≤900ppm

溴加氯之和最大允许含量为1500ppm/Br+Cl≤1500ppm

REACH 指令按最新法规内容管控执行/The instructions are subject to the latest regulations

包装材料环保管控要求/Environmental control requirements for packaging materials：Pb+Cd+Hg+Cr6 < 100ppm (其中, Cd<50ppm)

ZHEJIANG BAOLONG M&E CO.LTD

9.注意事项/Caution

(1) 该马达是微型精密产品，在运输过程中不要承受超过0.5 kgf的力，否则会引起外形或性能的变化.
As this motor is small and precise, do not press it over 0.5kgf force or while transportation, it can cause the transformation of performance or external appearance.

(2) 请注意马达不要接触到液体性物质（比如：水，酒精等）
please be careful, not to be contacted fluid substances (such as: water, alcohol etc.)

(3) 不要在高温下长时间放置，否则有可能导致电机的性能下降。
Do not expose the motor to high temperature for a long periods of time, it may cause a decline in performance.

(4) 马达不要在以下环境中使用：
- 高温和高湿的场所
- 腐蚀性气体如H_2S、SO_2、NO_2等
- Avoid using the motor in the following environment.
- High temperature and high humidity area.
- Corrosive gas such as H_2S、SO_2、NO_2 etc.

(5) 请不要在靠近磁铁或带有磁场的仪器旁边使用或存放马达。
Please do not operate or store the motor adjacent to magnet or apparatus That has a magnetic field.

(6) 请注意底盖的表面存在漏磁通量。
Please be careful that there exists a leaking magnetic flux on the surface of bracket.

(7)电刷和换向器的相互作用，有可能产生轻微的电噪音。
Due to interaction between brush and commutator, there is a possibility to occur electrical noise slightly.

(8) 如有任何问题，宝龙和客户双方应共同努力解决。
If any problems occur, both the user and baolong electron shall try to solve the problem.

(9) 因测试设备有误差，允许有±5%偏差。
Beacause there is error of the measurement equipment ,permit the standard of the rotational frepuency to ±5%

ZHEJIANG BAOLONG M&E CO LTD

10.附/Attached

10-1马达特性图/Characteristic Graph Of Motor

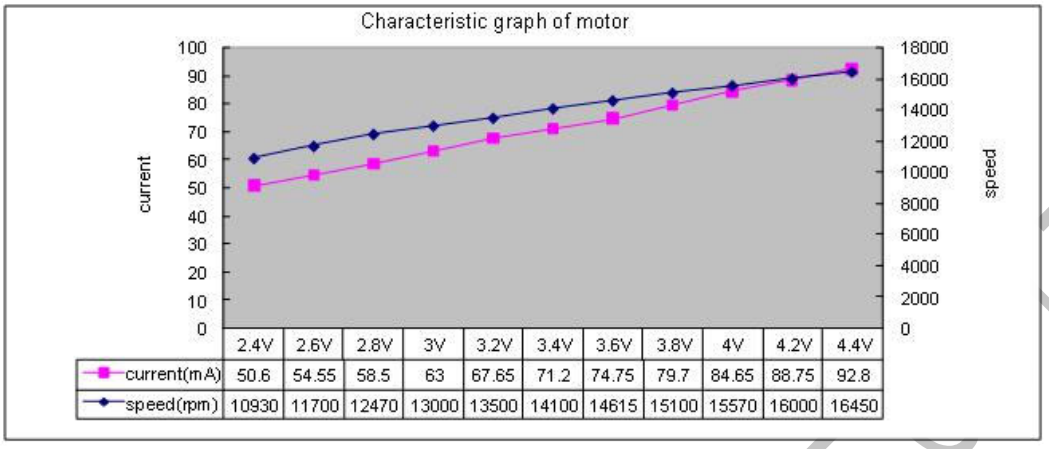

	2.4V	2.6V	2.8V	3V	3.2V	3.4V	3.6V	3.8V	4V	4.2V	4.4V
current(mA)	50.6	54.55	58.5	63	67.65	71.2	74.75	79.7	84.65	88.75	92.8
speed(rpm)	10930	11700	12470	13000	13500	14100	14615	15100	15570	16000	16450

10-2标准测量方式/State Of Standard Measurement

测试项目：启动电压，额定电压下的电流，额定电压下的转速，绝缘电阻。
Measure item: staring voltage, current at rated voltage, speed at rated voltage, insulation resistance.

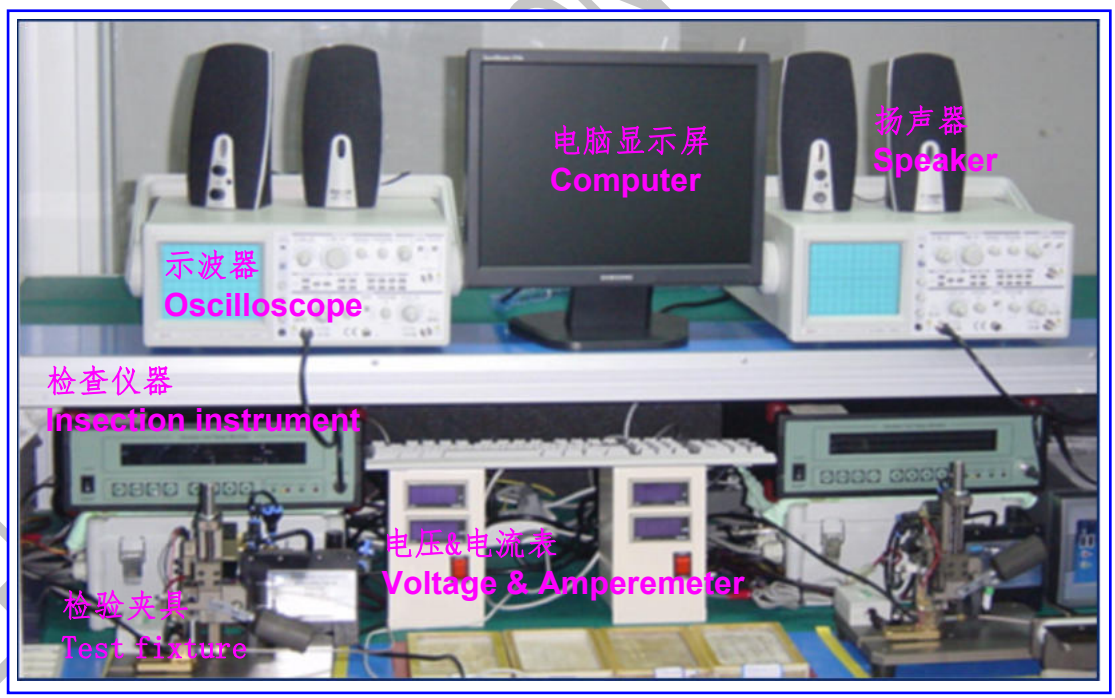

ZHONG M&E CO.,LTD

11. 外形图/Outside View

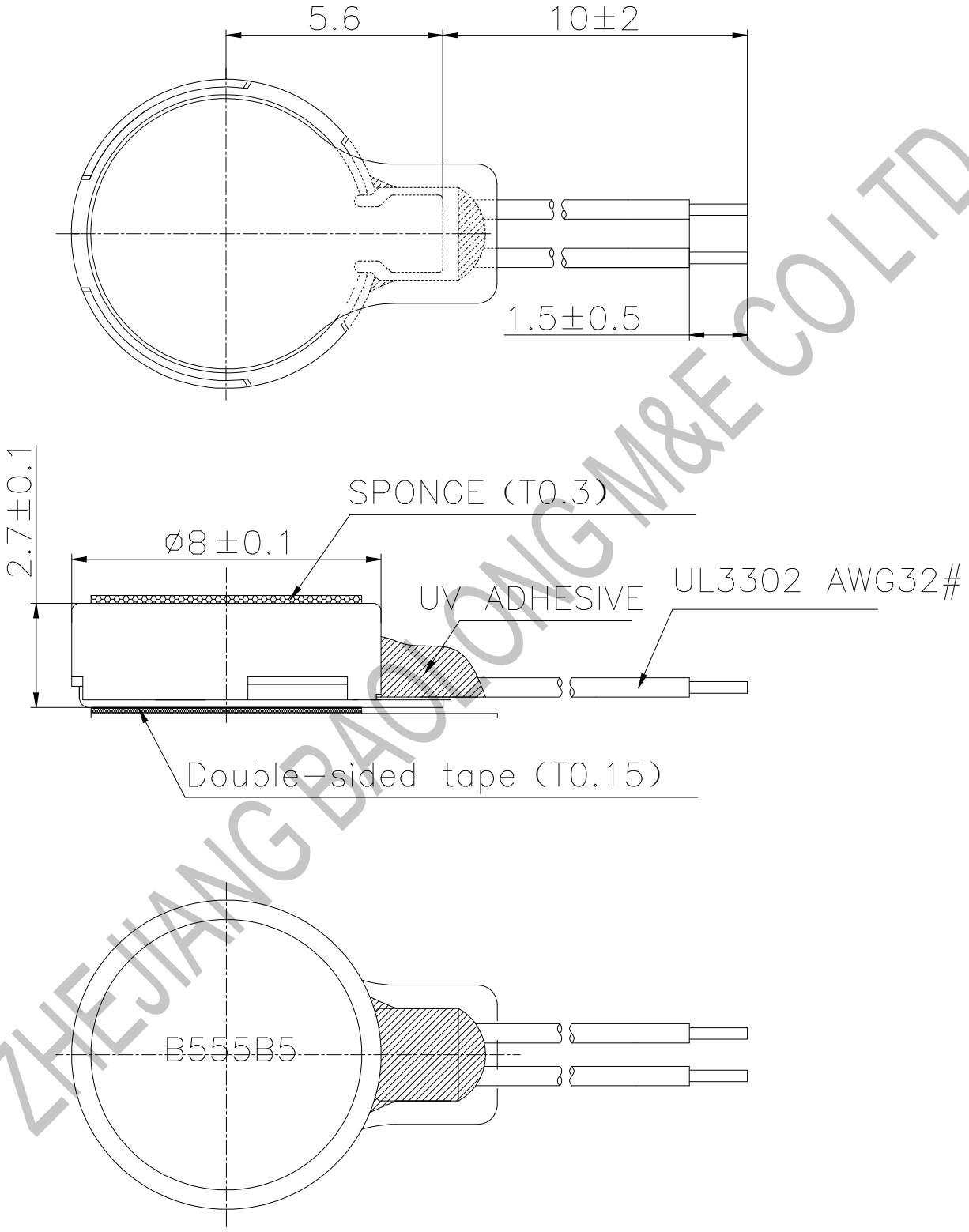

ZHEJIANG BAOLONG M&E CO LTD

12. 结构图及物料清单/Structure Drawing & BOM

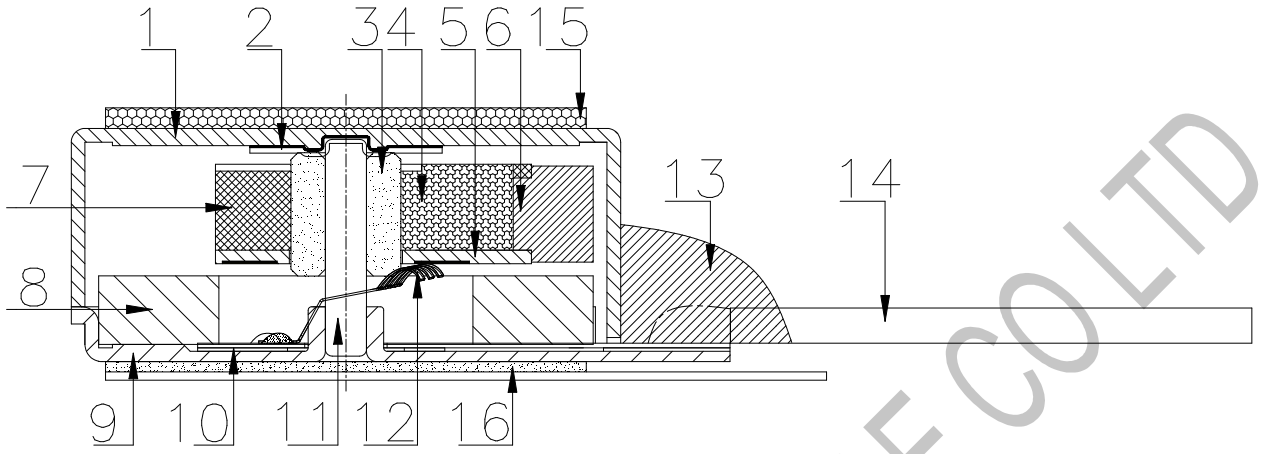

NO.	物料名称/Part name	材料/Material
1	上机壳 Upper case	SPC-E
2	滑片 Slide	PE+Acrylic
3	轴承 Bearing	Cu+Fe
4	线圈 Coil	Copper+PU
5	硬基板 HPCB	Epoxy
6	振子 Weight	Tungsten alloy
7	塑料 Resin	PBT
8	磁钢 Magnet	NdFeB
9	下机壳 Lower case	SPC-E
10	软基板 FPCB	PI+AD+Copper+Glue
11	钢轴 Shaft	DSR7B
12	电刷 Brush	MX215
13	UV 胶水 UV adhesive	Acryloid cement
14	引线 Lead wire	Cu
15	泡棉 Sponge	Sponge+Glue
16	双面胶 Double-sided tape	Cloth+Adhesive

ZHEJIANG BAOLONG M&E CO LTD

13.包装/Packaging

吸塑盒尺寸(长:250mm 宽:210mm 高:11mm)
Tray dimension (L:250mm W:210mm H:11mm)
每个吸塑盒放 100 只
100 Pcs per tray

内箱尺寸(260mm 宽:215mm 高:80mm)
Inner-box dimension (L:260mm W:215mm H:80mm)
每 11 个吸塑盒捆在一起,数量为 1000 只，装入内箱
Put into inner-box 11 tray together with tape 1000 Pcs per 11 tray .

4 个内箱装入外箱，数量共 4000 只；
Put 4 inner-box into outer-box, total 4000 Pcs.
外箱尺寸: (450mm 宽:280mm 高:180mm)
Outer-box dimension:
(L:450mm W:280mm H:180mm)

ZHAOLONG M&E CO LTD